Official Monthly Publication of the Society for Information Display

INFORMATION DISPLAY

November 1995
Vol. 11, No. 11

DISPLAY MANUFACTURING ISSUE

Mounting shadow masks
Excimer-laser annealing
Automation is coming
FPD sputtering issues

Official Monthly Publication of the Society for Information Display

INFORMATION DISPLAY

NOVEMBER 1995
VOL. 11, NO. 11

COVER: The large size, high weight, and long reach that characterize FPD processing intensify the need for automation in FPD manufacturing – but they also complicate its implementation. This substrate loading system was designed specifically to handle FPDs.

Credit: PRI Automation, Inc.

Next Month in Information Display

Technology Roundup Issue
- Display of the Year Awards
- CRTs
- LCDs
- Emissive Displays
- Manufacturing

INFORMATION DISPLAY (ISSN 0362-0972) is published ten times a year for the Society for Information Display by Palisades Institute for Research Services, Inc., 201 Varick Street, New York, NY 10014; David Slater, Chief Executive Officer; Leonard H. Klein, President; Laura Manganiello, Secretary/Treasurer. EDITORIAL AND BUSINESS OFFICES: Palisades Institute for Research Services, Inc., 201 Varick Street, New York, NY 10014; telephone 212/620-3371. Send manuscripts to the attention of the Editor, ID. DISTRICT SALES OFFICES: WEST/MID-WEST – Ted Lucas, 5428 N.W. Pinery, Newport, OR 97365; telephone 503/265-9140. EAST – Erika Targum, Palisades Institute for Research Services, Inc., 201 Varick Street, Suite 1006, New York, NY 10014; 212/620-3375. SID HEADQUARTERS, for correspondence on subscriptions and membership: Society for Information Display, 1526 Brookhollow Drive, Suite 82, Santa Ana, CA 92705-5421; telephone 714/545-1526; fax 714/545-1547. SUBSCRIPTIONS: Information Display is distributed without charge to those qualified and to SID members as a benefit of membership (annual dues $55.00). Subscriptions to others: U.S. & Canada: $36.00 one year, $5.00 single copy; elsewhere: $72.00 one year, $6.50 single copy. PRINTED by Sheridan Printing Company, Alpha, NJ 08865. Third-class postage paid at Easton, PA. PERMISSIONS: Abstracting is permitted with credit to the source. Libraries are permitted to photocopy beyond the limits of the U.S. copyright law for private use of patrons, providing a fee of $2.00 per article is paid to the Copyright Clearance Center, 21 Congress Street, Salem, MA 01970 (reference serial code 0362-0972/95/$1.00 + $0.00). Instructors are permitted to photocopy isolated articles for noncommercial classroom use without fee. This permission does not apply to any special reports or lists published in this magazine. For other copying, reprint or republication permission, write to Society for Information Display, 1526 Brookhollow Drive, Suite 82, Santa Ana, CA 92705-5421.

editorial

Making Displays

One way or another, display manufacturing is an international business. The French company Thomson owns and operates the RCA television plant in Indianapolis. Sony makes data-grade CRTs and monitors in San Diego and nearby Mexico. CRT plants operate in eastern Europe, India, and mainland China.

The lion's share of flat-panel displays are made in Japan, but substantial plant investments are being made in Korea, Taiwan, the Netherlands, and the United States. At least one Japanese and one Korean company are doing display assembly in the U.S. International partnerships and licensing agreements are common. American-made steppers and testers are sold in Asia, Japanese equipment is sold in the U.S. and Europe, and European equipment is sold in the U.S. (You can fill in any of the combinations and permutations I may have missed.)

In this, *Information Display*'s second annual manufacturing issue, Bob Donofrio's article on shadow-mask suspension systems hints at the vibrant international cross-fertilization in design and manufacturing. The other three articles address issues in flat-panel manufacturing – laser annealing, automation, and semi-reactive sputtering targets for ITO – that are of interest wherever FPDs are manufactured.

If you would like a first-hand look at the exciting technology, equipment, and business of international display manufacturing, consider attending Display Works 96, February 6–8 at the San Jose Convention Center. Jointly sponsored by SID, SEMI, and USDC, Display Works is a superset of SID's two successful Display Manufacturing Technology Conferences. For registration information, call SEMI at 415/940-6902. For information on exhibiting, call Cindy Goldstein at 415/940-6933, or you can call your local SEMI office if that's more convenient.

– Ken Werner

Official Monthly Publication of the Society for Information Display
INFORMATION DISPLAY

the display continuum

Out, Damned Spot! ...

by Aris Silzars

I must be a slow learner. It seems that whenever I try to gain understanding by reading about a subject or by being told about it in a classroom, it does not sink in very well. The only aha's I get are when there is agreement with what I think I already know or reinforcement of what I have chosen to believe. For really interesting new stuff, the results are invariably much better if I can have "A Personal Learning Experience." Lately, I have had a few such experiences that I want to share with you. They have caused me to rethink some previously held opinions about how much care one needs to exercise to protect the environment, particularly when building and operating a development lab and/or a manufacturing plant. As the display industry grows, and more of us become involved in the manufacture of displays, I believe these issues will take on increasing importance. Perhaps reading about my experiences will reinforce some that you have also had, or perhaps they will inspire you to search out new ones all your own.

Experiential Learning 101-A

No question about it, there was a pizza-sized bare spot in our lawn, and it was getting bigger. The year before, it had been less than a foot across, and now it had grown to at least eighteen inches. At first, I hadn't given it much thought. I could vaguely remember that when the house was being built four years earlier, a plumber's truck had been parked near that spot and had dribbled a bit of cutting oil or some other plumber-useful petroleum product. After the lawn was planted, the grass in that one little spot just didn't seem to want to grow.

No big deal. The rains would soon wash away whatever was there, nature would take care of the problem, and all would be forgotten. But a year later, the darn spot was still there, more prominent than ever. And the year after that. And now in the fourth year, it had grown to this ugly patch that could no longer be ignored. It had by now become that "damned spot." It was time for action.

My plan was simple. Dig up a few inches of the "dead" stuff and replace it with some fresh soil and turf. That should have taken all of a few minutes. But as each shovelful of soil was tossed into the wheelbarrow, an acrid, oily, solvent smell filled the air. The excavation grew to two feet across and six inches deep. Still the smell was there. One foot deep. I could still smell decomposing oily solvent. Eighteen inches down. It was finally getting fainter. Two feet down. The smell was no longer detectable (at least by my uncalibrated nose detector). Good. I had taken care of the problem.

Taken care of it – except for one minor but rather significant detail. I was now the not-so-proud possessor of one very large wheelbarrow full of thoroughly contaminated soil. Four years of rain and sun hadn't been able to clean it up – what was *I* going to do with it?

We live on a country road, and the weeds always seem to be a problem along the roadside. Considering that I couldn't come up with any other reasonable alternative, I decided that this stuff should be a great weed-killer, and, if I spread it out over a large enough area, nature should finally be able to dissolve or evaporate what was still left. And, luckily, I can report that now, one year later, the

continued on page 46

Society for Information Display
1526 Brookhollow Drive
Suite 82
Santa Ana, CA 92705-5421
e-mail: socforinfodisplay@mcimail.com
http://www.display.org/sid

Corner Lock Suspension

A CRT's shadow mask must be mounted to the panel precisely – but in a way that compensates for thermal expansion.

by Robert L. Donofrio

BECAUSE CATHODE-RAY TUBES (CRTs) constitute a mature technology, every detail of their construction has been refined time and time again – and continues to be. This is certainly true of the suspension systems presently used to hold the shadow mask in a color CRT in its proper position relative to the front panel. The demands on a suspension system become more severe as tubes get larger, and in this article we will discuss the corner suspension systems used in jumbo-size tubes – 31V, 32V, and 35V – by Philips, Thompson, and Toshiba (Fig. 1). (Matsushita and Sony use four-point "axial" systems.)

The Shadow Mask

The color shadow-mask system provides color separation by independently exciting each of the three primary-color phosphors in a triad – which are arranged in either stripes or dots – without permitting crosstalk between the color channels. This is done by keeping the shadow mask in the same fixed position relative to the screen when the phosphor stripes or dots are screened onto the faceplate and when the electron beam excites the phosphor, giving rise to the color image.

The modern shadow mask – or mask assembly – is composed of a thin apertured metal plate about 0.2 mm thick, a thicker

Robert L. Donofrio *is Engineering Group Leader at Philips Display Components, 1600 Huron Parkway, P. O. Box 963, Ann Arbor, MI 48106-0963; telephone 313/996-9400, fax 313/662-9090, e-mail: "a1::donofrio" @63.361.decnet.philips.nl.*

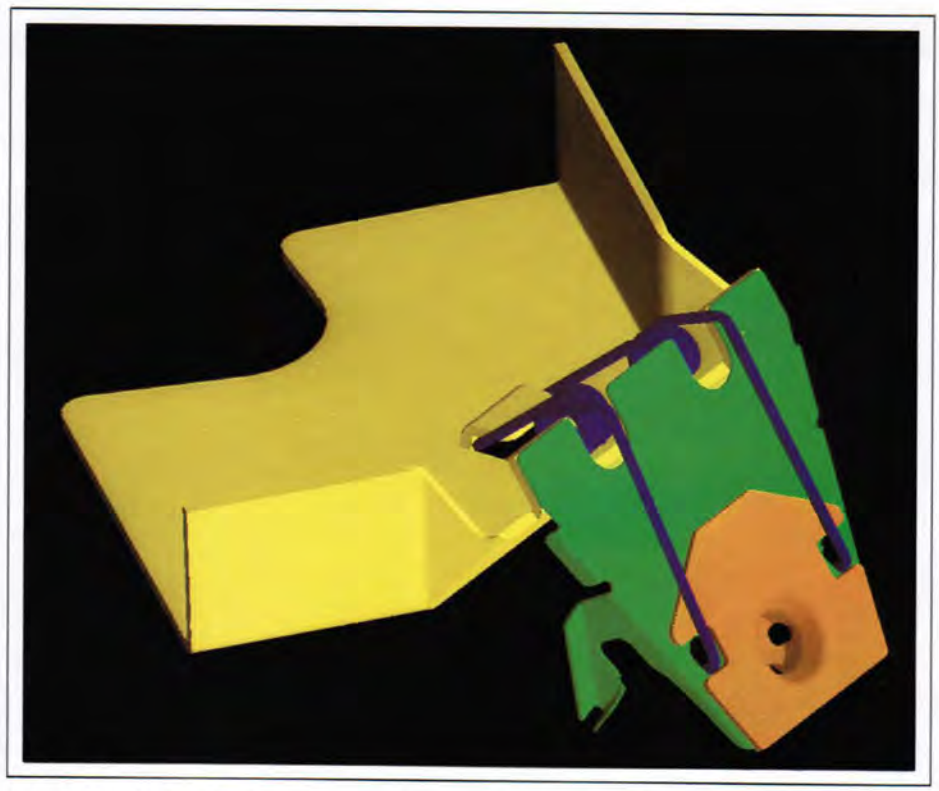

Fig. 1: *A typical modern corner suspension system for mounting the shadow mask of a large color CRT. This one, from Philips, is also shown in Fig. 4.*

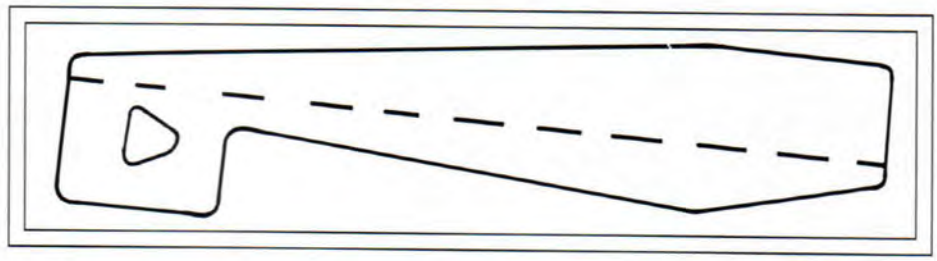

Fig. 2: *A bimetallic axial spring for suspending a color-CRT shadow mask.*

0362-0972/95/1111-012$1.00 + .00 © SID 1995

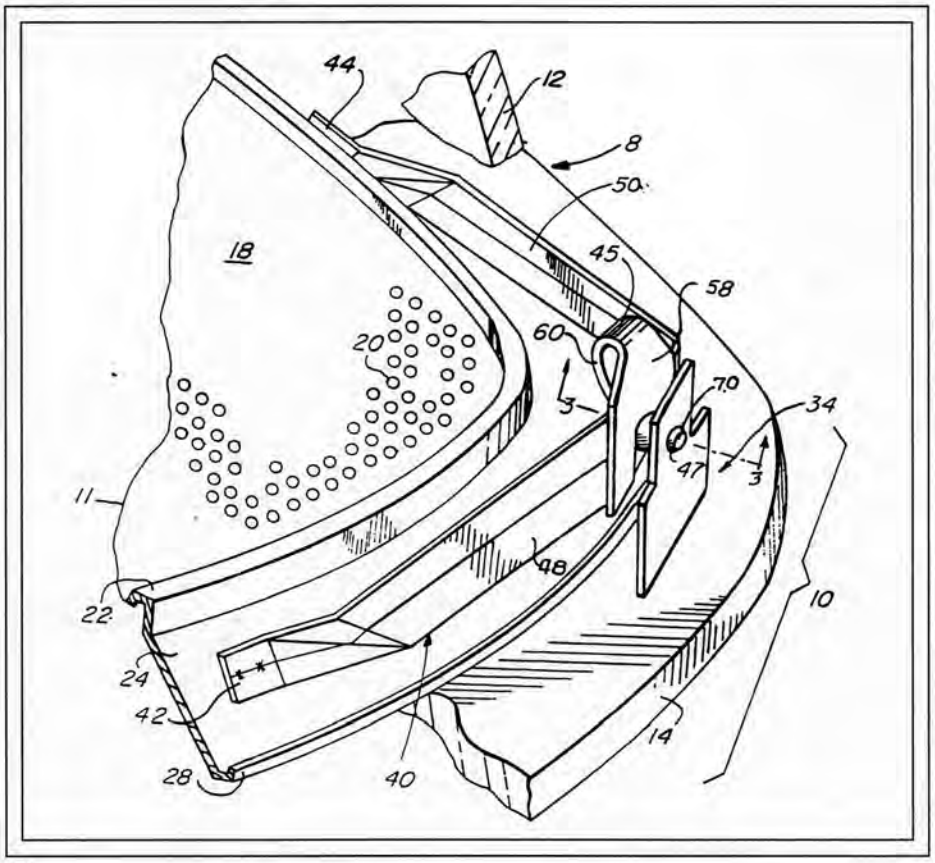

(a)

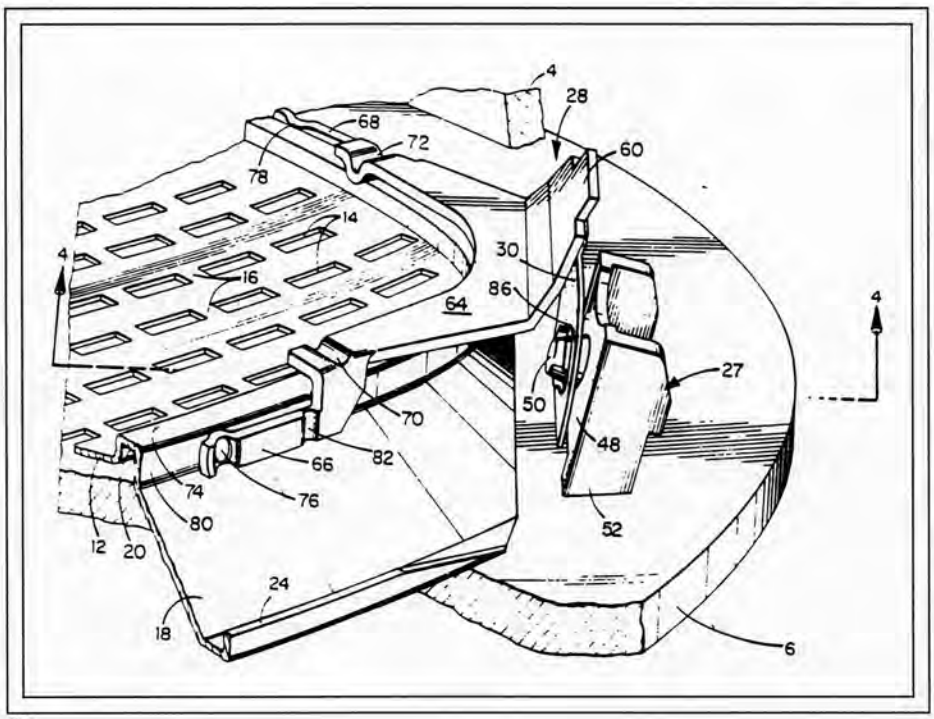

(b)

Fig. 3: (a) "Old" Zenith corner suspension system. (b) Zenith's Mark IV corner suspension system.

frame structure to which the aperture mask is welded, and suspension springs that are usually secured to the frame. The mask is usually bent to a specific contour in a process called forming. The mask assembly is kept in its preferred position by three or four supports called studs or pins that are located in the glass panel. The springs that are welded to the frame lock on to the studs. There are two basic types of suspension systems used in today's color CRTs: axial suspension and corner suspension. In an axial system, the studs are located near the center of each side of the panel skirt – the extension of the CRT's glass front panel that is approximately at right angles to the panel itself. (If the panel is placed face down on a workbench, the skirt will stick up like the sides of a glass baking pan.)

Mask Heating and Axial Springs

The number of holes (or apertures) in the shadow mask is only about one-third the number of dots (or stripes) on the panel. Allowing for support ribs and tie bars, the mask transmits only about 20% of the electrons that impinge upon it. Therefore, during the operation of a color tube, about 80% of the electrons strike the mask, which heats it.

As a rule of thumb, a mask which is bombarded with 25-kV electrons at a current of 1.2 mA becomes heated to about 80°C if special measures are not taken to counteract the heating. Among these countermeasures is the use of coatings on both the mask and on the aluminum on the phosphor screen. Using a material with a higher atomic number as a coating on the mask will backscatter more electrons, and using a heat-absorbent coating on the aluminum will transfer heat to the panel and thus provide a cooler mask.

A heated mask expands and domes. If nothing were done, this would cause a shift in the position of the electron beam striking the panel. Ideally, the action of the bimetallic axial springs is to move the domed mask closer to the panel (Fig. 2). This motion repositions the apertures to allow the electron beam to pass through the same aperture to excite the same phosphor stripe it had excited before the mask was heated. Unfortunately,

the doming of masks with axial suspension can lead to a 30–40-μm spot displacement in that part of the mask that is most sensitive to doming – the region about two-thirds of the distance from the center to either end of the horizonal axis (C. Admiraal and H. Bongenaar, 1988). If uncorrected, this doming can lead to purity (color) changes in the viewed picture.

Axial Systems

The mask doming caused by heating was corrected in early round color tubes by using three mounting springs equally spaced with 120° separations (C. Admiraal and H. Bongenaar, 1988). When rectangular color tubes were introduced in the 1960s, the three springs were placed near the tube axis. Some manufacturers added a fourth spring for rigidity. These springs are called thermal-compensation springs and are located between the panel studs and the mask. The thermal compensation is achieved by using two dissimilar metals, such as CrNiFe and NiFe, and the designed shape of the springs. The action of the springs is to move the mask towards the panel as the mask, frame, and springs are heated. The problem here is that the thermal compensation is slow because of the large mass of the mask and frame and that the springs must heat up via the heating of the mask and frame.

In addition, there are unwanted effects stemming from heating of the deflection yoke, which provides "compensation," *i.e.*, mask–frame motion, even when the mask does not dome. And there is torsional deformation at the corners of the mask because the heavy corners are not supported (K. Tokita *et al.*, 1988). These corners can give rise to microphonic movements, and rotational or bending movements occur because the axial springs have some non-symmetrical compensation. Recently, it has been observed that in axial systems there is a tendency for the mask to rotate upon heating, and, depending on the design of the mask frame, bowing may be seen in the corners (S. K. See *et al.*, 1994).

Corner Suspension Systems

In the 1970s, Kazimir Palac of Zenith developed a corner-like suspension in a forerunner of the Mark IV tube (K. Palac, 1975). Here the corner-like suspension was made up of two bimetallic springs secured to a plate that locks into a corner bracket [Fig. 3(a)]. In 1976 Adamski patented the leaf-spring system with a frameless mask [Fig. 3(b)]. This was the system discussed by Palac in 1976 for the Mark IV tube, which used a frameless mask and a skirtless panel.

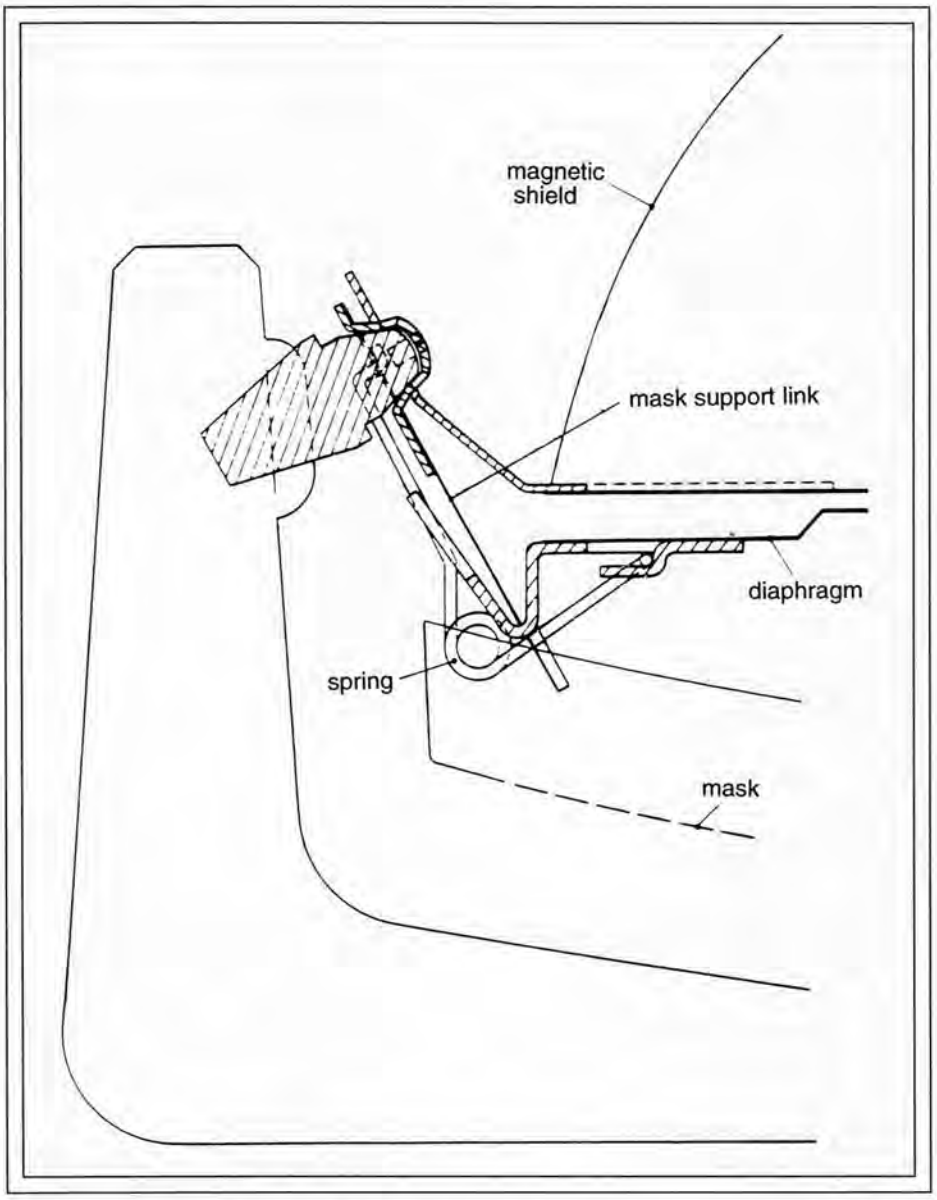

Fig. 4: Philips' corner suspension system.

But the real thrust towards corner suspension came with the advent of the flat square (FS) picture tube. In the last few years, masks with reduced doming have also been required because of the increased use of high-contrast low-transmission glass, which requires a higher beam current and anode voltage to get back some of the luminance lost using the light-absorbing glass. In some cases, these conditions have required the use of a mask material – such as Invar™ – with a lower coefficient of expansion to reduce the doming. These factors have made corner suspension systems a common feature in today's jumbo color picture tubes.

In our Philips mask-suspension system, a lightweight mask frame is used to allow the mask and frame to achieve the same tempera-

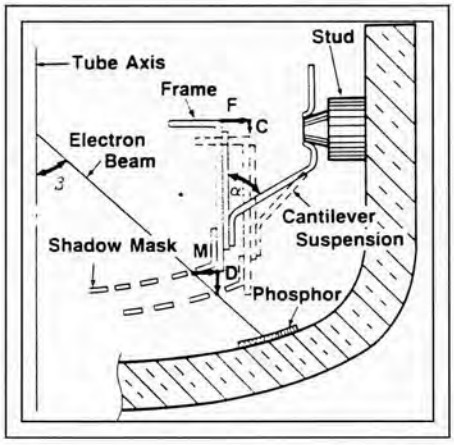

Fig. 5: Toshiba's corner suspension system.

ture rapidly. By suspending the mask with a non-bimetallic hinge plate and setting the plate at the required angle, "a complete geometrical compensation for the expansion of the mask occurs. This system does not have to wait for the hinge plate to warm up before it reacts" (Fig. 4) (J. van den Berg and A. A. S. Sluyterman, 1991). In the final assembly, the hinge plate is laser-welded to the panel stud to ensure that the mask assembly will not come off the panel stud. The Philips system has been tested in drop tests and no permanent purity degradation was seen for accelerations up to 60 g.

In 1987, Toshiba described a non-bimetallic corner-suspension support system. Here the angle of the stud and hole in the cantilevered plate have been arranged to make the plate "skidproof" (Fig. 5) (K. Tokita *et al.*, 1988).

In 1990, Thomson Consumer Electronics reported on the corner lock-type mask suspension systems used on its 31V (Fig. 6) (R. C. Bauder and F. R. Ragland, 1990). Their design considerations were a low-mass mask frame, tolerance of 35-g shock, effectiveness on tubes with a 16 × 9 aspect ratio, geometrical and thermal compensation adjustable for iron and Invar masks, and design-for-manufacturability criteria. Thomson showed that Invar masks have now reduced the beam motion to about 10 µm on the major axis. But "steel" and iron masks give a much larger major-axis beam shift.

(a)

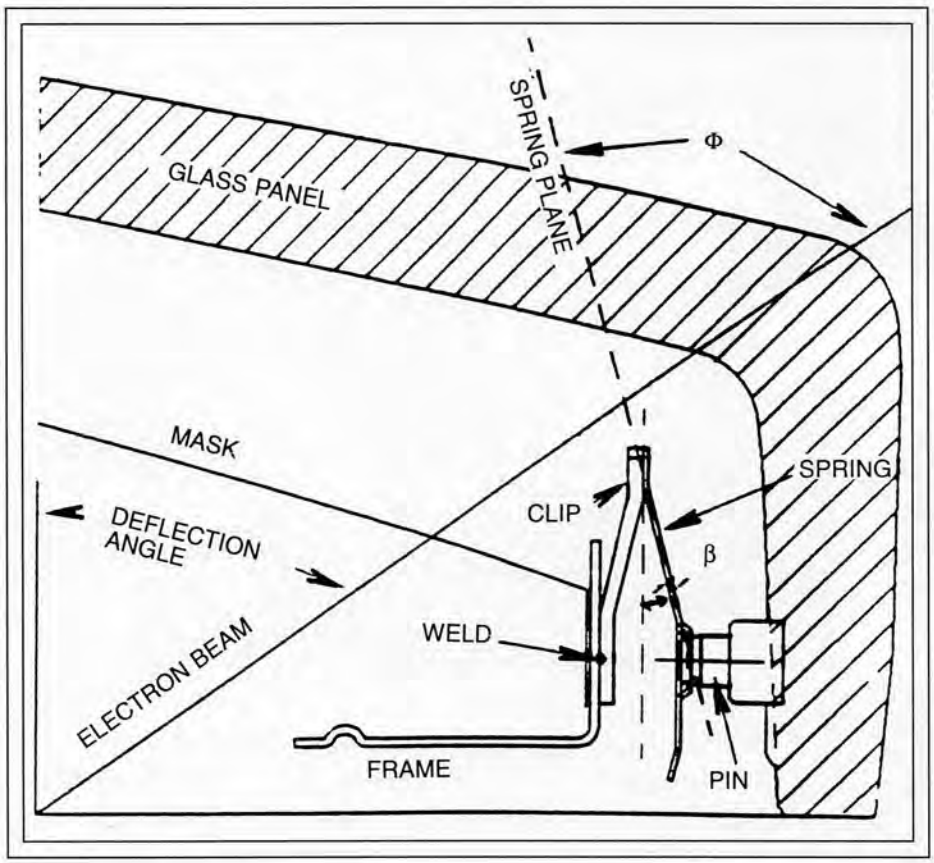

(b)

Fig. 6: (a) Photo and (b) drawing of Thomson's corner suspension system.

Summing Up

There are presently three different types of corner suspension systems for jumbo tubes: those of Philips, Toshiba, and Thomson. The Philips system (with geometric compensation) has a very light frame and hinged corner brackets that are laser-welded to the studs. The Toshiba method (with geometric compensation) uses a heavier frame with cantilevered suspensions at the four corners. The Thomson system uses a frame similar in weight to Toshiba's and a corner "clip-and-spring" sys-

tem with geometric and thermal compensation. In order to correct for some of the problems discussed in this article, axial suspension systems use mask frames that are very heavy – and usually in a panel that is not as flat as those permitted by corner suspension systems.

Acknowledgment

The author thanks Dr. V. Lakshmanan, Mr. A. Adamski (at Ann Arbor), and Dr. T. Hens of ITC (at Eindhoven) for their support.

Bibliography

Adamski, Alfred, U.S. Patent No. 3,986,072, Oct. 12, 1976.

Admiraal, Cees, and Bongenaar, Henk, "New Suspension Design Yields Improved CRTs, *Broadcast Engineering*, 146-150 (October 1988).

Bauder, Richard C., and Ragland, Frank R., "An Improved Shadow-Mask Support System for Large-Size CRTs," *SID Intl. Digest Tech. Papers*, 426-429 (1990).

Palac, Kazimir, U.S. Patent No. 3,890,526, June 17, 1975.

Palac, Kazimir, "A New Approach to Shadow Mask Color Tube Construction," *IEEE Trans. Consumer Electron.*, 289-291 (November 1976).

Pavlik, K., "Corner-pin Suspension: An Improved Shadow-Mask Suspension System," *ICCE* **84**, 70-71 (1984).

See, S. K., Yoon, T. S., and Kim, K. B., "Shadow-Mask Thermal Deformation and Beam-Landing Shift," *SID Intl. Digest Tech. Papers*, 512-515 (1994).

Tokita, K., *et al.*, "A New Shadow-Mask Suspension System for a Color CRT," *Proc. of the SID* **29**, No. 1, 13-17 (1988).

van den Berg, J., and Sluyterman, A. A. S., "Direct-View and Projection CRTs for HDTV, *Proc. of the SID* **32**, No. 4, 267-271 (1991). ■

Please send new contributions or noteworthy news items to Aris Silzars, Contributing Editor, Information Display, c/o Palisades Institute for Research Services, Inc., 201 Varick Street, New York, NY 10014.

Excimer-Laser Annealing

Polysilicon makes better TFTs, but how do you fabricate them at low cost and high throughput?

by Michael Simile

TODAY, A BROAD RANGE of liquid-crystal displays (LCDs) is available to the product designer. A full-color active-matrix liquid-crystal display (AMLCD) – one of the most technically demanding display devices – can meet the needs of the most advanced industrial and consumer products. But once the designer chooses an AMLCD, the type of transistor used in that display must also be selected: either a polysilicon thin-film transistor (poly-Si TFT) or an amorphous-silicon (a-Si) TFT. Poly-Si TFTs provide many advantages, especially in direct-view displays with diagonal measurements greater than 17 in., in small displays with closely spaced pixels, and in displays viewed from relatively wide angles.

Poly-Si TFTs offer a carrier mobility that is 2–3 orders of magnitude higher than that of a-Si. Higher carrier mobilities permit peripheral driver circuits to be built directly on the display substrate. Built-in driver circuits support high-density displays, reduce the number and length of interconnect lines, and improve display refresh times. With all these benefits, however, poly-Si TFTs have yet to be widely adopted.

Manufacturability issues have deterred designers from routinely adopting poly-Si TFT-based displays. Yields have been low, costs have been high, and production-level

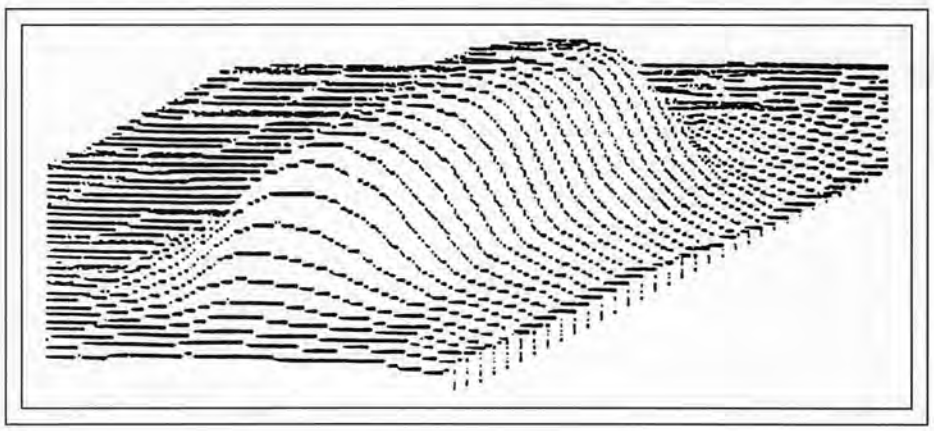

(a)

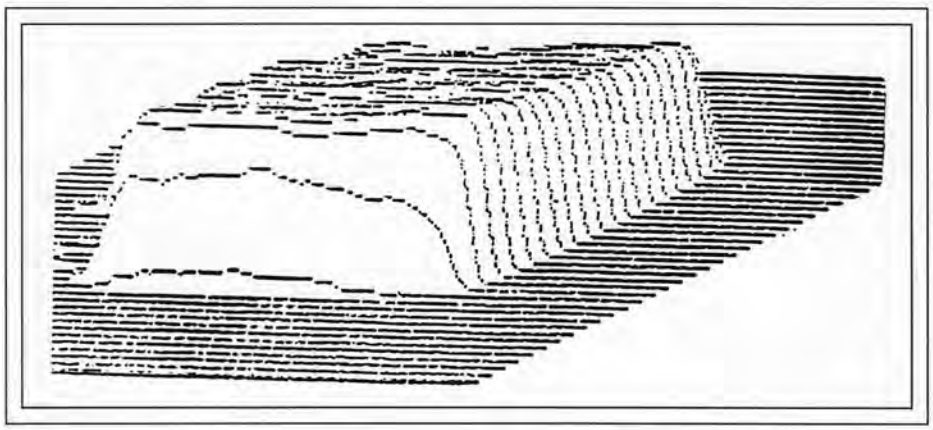

(b)

Fig. 1: *(a) The classic quasi-Gaussian intensity profile of an excimer-laser beam is not ideal for the uniform heating of a deposited a-Si film to produce consistent laser annealing. (b) Processing the beam with a beam homogenizer gives the beam a "top hat" profile, with an intensity that is constant across the top to ±5%. This profile allows precise spatial scanning across the substrate.*

Michael Simile *is President and CEO of XMR, Inc., 5303 Betsy Ross Drive, Santa Clara, CA 95054-1102; telephone 408/988-2426, fax 408/970-0742.*

0362-0972/95/1111-018$1.00 + .00 © SID 1995

manufacturing rates have not been achieved. However, we believe that a new process being discussed in the industry is capable of making poly-Si TFT-AMLCDs the devices of choice.

The Lure of Poly-Si

Currently, most AMLCDs use TFTs made of a-Si because the a-Si process is relatively straightforward and, although a-Si is not a high-quality semiconductor material, it has been good enough for most applications. But now, product designers are demanding AMLCDs that are brighter and have increased resolution. The demand for increased brightness means that more light must pass through each pixel. The demand for increased resolution requires pixels to be placed closer together – and therefore smaller. One way to simultaneously satisfy these conflicting demands is to increase the aperture ratio of each pixel – the percentage of the pixel area through which light can pass. And the most direct approach to increased aperture ratio is making the TFT smaller.

Maintaining switching speed in more densely constructed pixel arrays – especially as displays increase in size – requires higher carrier mobilities than a-Si can provide. This is where polysilicon's main advantage comes in: carrier mobilities are excellent. And as TFTs become smaller, uniformity in the deposited a-Si, as well as in the recrystallized poly-Si, becomes more important.

CMOS driver circuits for AMLCDs are currently constructed as separate integrated circuits, remote from the display, and constitute a significant cost in their own right. The difficulties in making connections to these remote driver circuits in turn create yield problems. CMOS drivers can be implemented in poly-Si, which means they can potentially be fabricated on the display substrate at the same time as the TFT layer itself. This could reduce cost and improve reliability, dramatically reducing the number of connections between the display and the outside world. Driver integration is desirable now and is likely to become much more so as the complexity and density of LCD circuitry increases.

The main obstacle to selecting poly-Si AMLCDs has been their manufacturability. One significant area of improvement has been the development of a low-temperature annealing process in lieu of high-temperature furnace annealing. Recently, a development contract sponsored by the Advanced Research Projects Agency (ARPA) provided the means for XMR, Inc., and Xerox PARC to develop and prove this alternative method to furnace annealing.

Getting a Handle on Annealing

In the traditional poly-Si fabrication process, the deposited a-Si is converted to poly-Si by placing the entire substrate in an annealing furnace. But the temperatures encountered in the annealing furnace would damage the glass typically used for a-Si AMLCDs. The current solution to this problem is to use a quartz substrate, which has a higher melting point but is also substantially more expensive. Another drawback to furnace annealing is that the heating and cooling times are quite long, typically several hours, and the substrates are batch-processed. Both of these requirements decrease throughput rates in high-volume manufacturing. Nonetheless, furnace annealing produces good results and is viable for the current generation of small – 4-in. on the diagonal or less – poly-Si displays used for head-mounted, camcorder, and projection applications. However, when manufacturers contemplate using furnace annealing for 10-in.-diagonal and larger displays, the issues of substrate cost, throughput, and yield become more significant.

In the process evaluated by XMR and Xerox PARC, a fast-pulsed excimer laser is used to crystallize a-Si into poly-Si. Because the laser can heat the silicon to the proper

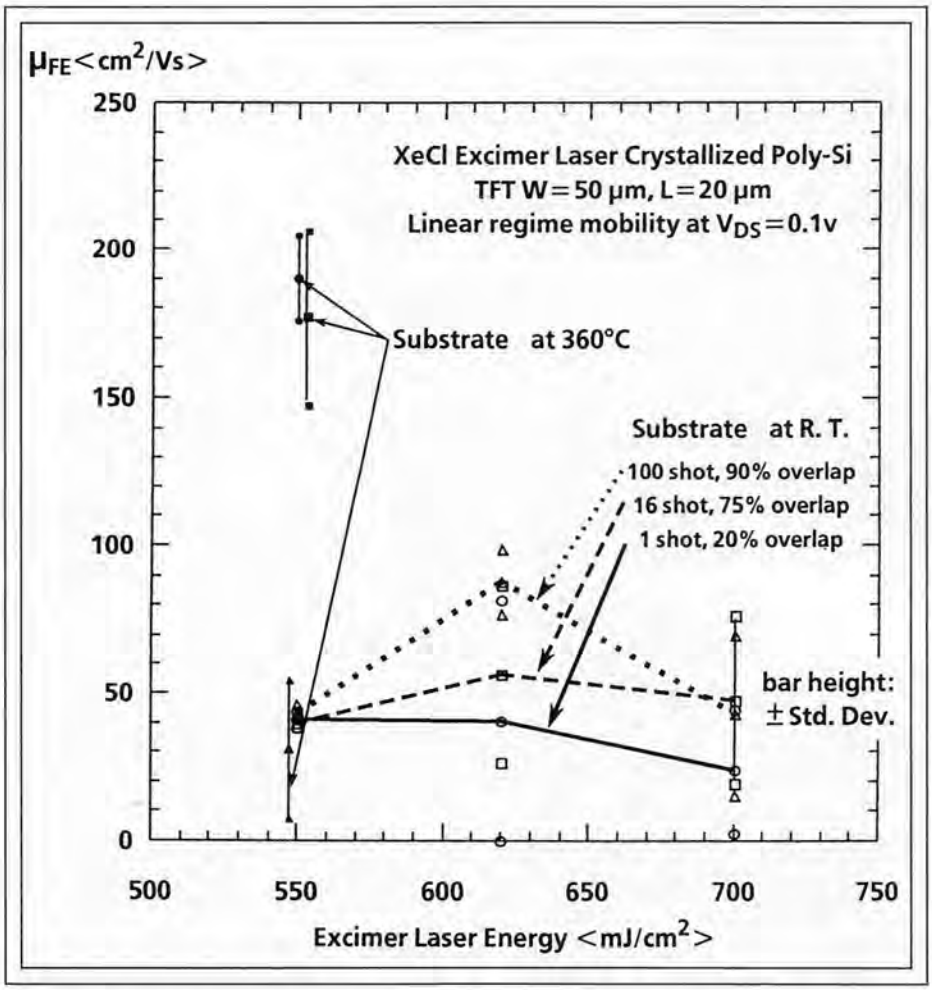

Fig. 2: The carrier mobility in laser-annealed poly-Si TFTs depends upon laser shot density, laser energy, and substrate heating, among other variables.

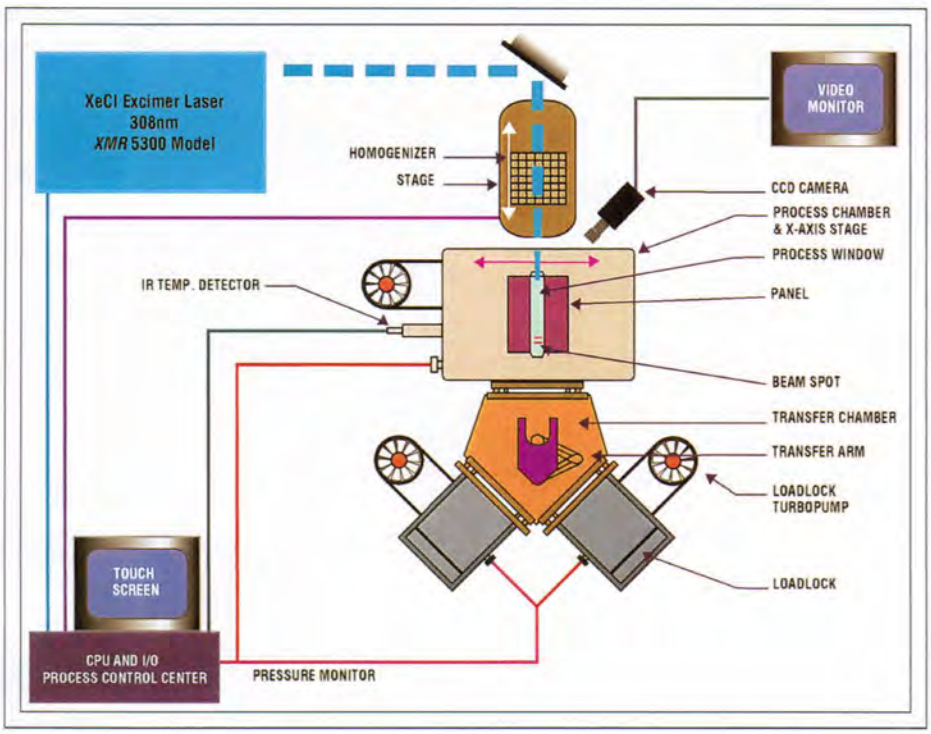

Fig. 3: XMR's ELA 9100 excimer-laser annealing system is composed of a 200-W 308-nm XeCl excimer laser that generates up to 667 mJ/pulse at 300 Hz, a beam-delivery and substrate-handling system, and translation stages, vacuum chamber, and control systems. The system can anneal 20 substrates/hour, each as large as 350 × 450 mm.

annealing temperature without heating the substrate past its damage threshold, relatively low-cost glass can be used as the substrate material.

How Excimer-Laser Annealing Works

The XMR study utilized a high-repetition-rate (300-Hz), fast-pulsed (45-ns), 308-nm XeCl laser. The ultraviolet laser energy is strongly absorbed by the layer of deposited a-Si, where the energy produces high local temperatures and crystallizes a-Si into poly-Si. The laser beam was shaped into a rectangle, the dimensions of which can be varied from 2 × 2 to 65 × 65 mm – including very high aspect ratios up to 2 × 65 mm. The laser beam is scanned across the substrate surface at sweep rates of up to 13.4 mm/s in combination with laser-pulse repetition rates of up to 100 Hz. The scanning pattern is a raster scan, with the beam perpendicular to the surface of the substrate.

The laser's overlapping pattern of rectangular pulses is controlled with high precision by the motion of the stage and the optical train. Thus, the system can integrate both a-Si and poly-Si devices on one substrate by selectively annealing only those areas of a-Si which the designer wishes to convert to poly-Si.

XMR has developed a beam homogenizer that controls the size, energy intensity, and uniformity of the beam. The homogenizer converts the laser's quasi-Gaussian beam-intensity profile to a uniform "top hat" profile that is essential to the annealing process (Fig. 1).

Our study showed that conditions must be controlled with high precision if the desired results are to be achieved. It may not be easy to stabilize laser crystallization at optimal peak energies if conditions such as substrate temperature, laser-energy intensity, or film thickness are changed. Even small variations from optimal conditions may produce undesirable grain size and reduced mobility, as well as inconsistent crystallization. Factors such as shot density – the effective number of laser shots at any specific location – laser energy, and substrate heating can have significant consequences for the ultimate performance of the device (Fig. 2).

Thus far, research indicates that optimal annealing can be accomplished with excimer lasers and low shot density if the energy-density levels are high enough. A 10% decrease in the overlap, which effectively decreases the shot density by 10%, can improve throughput rates by as much as an order of magnitude thanks to decreased scan (processing) times. Equally important are maintaining laser-energy stability and beam uniformity to produce optimum uniformity in annealed devices on the flat-panel display (FPD). The ELA 9100 is an excimer-laser annealing system that provides the high power, stability, uniformity, and control necessary to create poly-Si devices (Fig. 3).

The Study's Conclusion

The ARPA-sponsored project concluded earlier this year, but research and process improvement are ongoing. At the 13th IDRC, Strasbourg, France, August 31–September 3, 1993, XMR and Xerox PARC jointly reported that excimer-laser crystallization produces device mobilities that are more than adequate for AMLCD applications without compromising uniformity. XMR presented results at the SEMICON/Kansai-Kobe FPD Technology Symposium (June 16–17, 1994) indicating equally good mobilities and device characteristics that can be achieved using either PECVD a-Si or LPCVD a-Si, which should win broader acceptance for the process. Finally, this year at SID's Second Annual Display Manufacturing Technology Conference in Santa Clara, California (January 31–February 2, 1995), a paper was presented that showed throughput rates can be increased by using an ultra-long beam, with a high aspect ratio, that reduces the number of scanning passes required to anneal a substrate, thus improving process throughput.

With the development of a well-defined manufacturing process and a tool that can readily control the key parameters, excimer-laser annealing is now able to deliver reduced materials and process costs, improved device performance, and the ability to mix a-Si and poly-Si devices on the same substrate – thus allowing the integration of CMOS drivers. We therefore believe that excimer-laser annealing is now a viable and attractive alternative for creating the poly-Si necessary for the most advanced AMLCDs. ■

Automation Is Coming!

Makers of automated semiconductor-manufacturing systems are applying their know-how to the needs of FPD fabricators.

by James J. Costa

THE FLAT-PANEL-DISPLAY (FPD) industry is addressing the same issues today that the semiconductor industry faced in 1990. Major manufacturers dominate the industry, while second-tier and specialty fabrication facilities (FABs) are carving out important niches. Larger substrates are on the horizon, and manufacturing quality and productivity are receiving great attention.

In 1990, major shifts were occurring in the consumer marketplace for products that used semiconductors. External market forces (consumer demand for new electronics products, product competition, and more cost-effective purchasing) and internal industry forces (new technologies, technology licensing, and strategic alliances) drove the main players to base their next big competitive moves on price competition. Long-range strategists recognized that price competition would only be possible by optimizing the FAB and that automation would be the heart of that process.

We will now take a look at the parallels between semiconductor FABs and FPD manufacturing, and we will find that FPD manufacturers are well positioned to employ some of the robotic and automation products that have been proved by their semiconductor cousins. Fortunately for FPD manufacturers, mainstream automation companies are now drawing upon their years of experience in semiconductors to introduce the next generation of FPD robotics.

***James J. Costa** is Vice President of the Automation Systems Division of PRI Automation, Inc., 805 Middlesex Turnpike, Billerica, MA 01821-3986; telephone 508/670-4270 ext. 3369, fax 508/663-1825, e-mail info@pria.com.*

Semiconductor Automation

In 1995, more semiconductor FABs in North America have begun major automation programs or retrofits than in the previous 5 years combined. Three key end-user demands that have had dramatic impact upon semiconductor technology, processing, and materials handling are the forces driving towards automation.

Higher Performance. The use of more powerful semiconductors in a broad spectrum of existing and new applications quickly impacted the FAB floor. These new chips were physically larger, more valuable, much more complex, and had finer line geometries. These characteristics forced major process changes that could only be accomplished with automation and robotics.

The higher chip densities raised the value of the wafers and therefore the cost of errors. New, more expensive process tools were developed that demanded higher utilization to achieve capital payback. Finally, the sheer volume through the FABs mandated increased attention to tracking work-in-process (WIP), storage-space requirements, and manufacturing control.

Lower Prices. FABs also had to meet market demand for lower prices through better asset utilization (storage space and expensive process equipment), higher yields (cleanroom environments and reduced error rates), and significant improvements in productivity (via WIP control).

The need to lower prices has produced a drive to ever-increasing wafer sizes, which require ever-increasing levels of automation. The movement from 100-mm-diameter wafers to 200 mm – and now to 300 mm – did more than simply raise the value per wafer. It also created a significant ergonomic and human-risk issue. The increased weight of cassettes and pods, combined with the increased volume through the FAB, made manual tool loading and materials transport too dangerous, as well as impractical for yield and productivity reasons.

Faster Time-to-Market and Product Differentiation. As worldwide competition increases, bringing a technology to market quickly becomes crucial to a company's success. In addition, it is difficult to pick up a major magazine today without seeing articles on added value and product differentiation. These issues are certainly evident in semiconductor FABs – and in FPD manufacturing.

But bringing new technologies to market quickly and responding to changing market requirements in an agile fashion demand that the FAB be able to respond quickly, re-tool as necessary, expand when required, and constantly be under tight manufacturing control. Flexibility is critical. More set-ups and multiplexed operations increase demands upon cycle time, tool utilization, and WIP control.

In the past 5 years, robotics and automation have had a dramatic impact on semiconductor FABs by:

- Raising utilization of expensive process equipment and tools.
- Reducing particulate contamination and increasing yields.

0362-0972/95/1111-022$1.00 + .00 © SID 1995

- Addressing ergonomic and safety issues.
- Lessening the need for very costly clean-room space.
- Reducing storage requirements.
- Increasing manufacturing and WIP control.
- Improving handling and yields for fragile and expensive product.
- Providing manufacturing flexibility and multiplexing.

In short, automation provides us with the most cost-effective way of transporting fragile, high-value product through the FAB while maximizing yield, output, and safety.

Components of an Automation System

One of the most vexing issues in FPD automation is the degree to which leading FPD manufacturers have been forced to develop their own automation system strategy and customize their automation components.

The four general areas in which automation can help obtain the most cost-effective facility are automated storage and retrieval systems, materials-transport systems, tool-loading systems, and materials-control software.

The first opportunity to benefit from robotics is in automated storage/retrieval systems (AS/RS). The AS/RS "stockers" in semiconductor facilities look like nearly featureless cabinets on the outside, but they allow maximum storage with a minimum footprint. There is no need for WIP build-up to be concentrated on the FAB floor. Current-generation stockers can easily be connected to automated materials-transport systems that can deliver cassettes/pods to process tools down the aisle – or to the next building.

The transport of materials is the second part of a comprehensive and flexible automation system, and is in many ways the heart of a network of storage, tool-loading, intermediate WIP, and process-line automation equipment. In semiconductor facilities, automated guided vehicles (AGVs) and overhead monorail transport systems are both in common use. Automated FPD-processing facilities use on-surface rather than overhead transport because of the weight and size of the panels. These AGVs transfer materials between stockers and between a stocker and the process tools (Fig. 1).

Once material is at a processing bay or section, automated guided transport/loaders (AGTLs) bring the WIP to the robots that load the process tool. These AGTLs use either tracks or paths defined by material embedded in the floor or applied to its surface. Because the on-surface paths can be moved as needed, these guided vehicles are very flexible components of the manufacturing system that can respond quickly to a need for plant expansion or revised product flow with minimal impact upon production.

PRI Automation, Inc.

Fig. 1: This robot vehicle loads substrates into manufacturing tools.

The third piece of the automation puzzle consists of tool-loading robots (see cover photo). Such systems are designed to maximize the utilization and throughput of today's expensive dedicated process tools. For FPD

manufacturing, these systems must be able to handle the weight of the panels, the extended-reach requirements, the load orientation, and the required z-plane movement, which is substantially greater than that required of their counterparts in semiconductor processing.

The fourth requirement is for an automation materials-control software (MCS) system that is an integral part of the manufacturing host software. Manufacturing control mandates strict WIP lot tracking in the production and storage area, optimized materials movement, and process-tool integration. This, in turn, means that the robotics must be fully integrated with the MCS and provide automatic update of WIP and inventory status.

When all four parts of the automation system are present, there is still one final critical requirement which is common to every automation system: flexibility. It is difficult to overstate the need for automation and robotics to work within the constraints of existing facilities and process requirements. And any automation and robotics system must be able to accept facility changes without impacting production. Multiplexing of products within a given facility demands an automation system that can be reconfigured on the fly. An integrated and flexible automation system must handle complex materials routing and processing changes – and still provide absolute WIP tracking and manufacturing control.

Parallels between Semiconductor and FPD Automation

The most significant differences between the very similar sets of requirements for FPD and semiconductor manufacturing are size and cleanroom requirements. Both industries face the same demands to maximize tool utilization, tightly control WIP, process diverse products through the facility, handle large storage requirements, and maximize yields for problematic products.

The word that distinguishes FPDs from semiconductors is "BIG." Large size, high weight, and long reach characterize FPD processing and amplify the need for automation. The semiconductor industry's mainstream sizes of 150- and 200-mm diameters compare to the FPD industry's 350 × 450 mm. While the semiconductor industry contemplates 300-mm wafers, the FPD industry is already moving to 550 × 650 mm (Fig. 2).

The impact of size upon an FPD facility is significant. A fully loaded FPD cassette/pod weighs several times more than its semiconductor counterpart. The need to access large cassettes/pods with a wider pitch and thicker end-effectors requires increased z-plane movement. Today, many robotic systems designed for the semiconductor industry cannot handle such large panels without excessive sag, do not have sufficient z-plane movement, and are not able to load process tools because of the weight and reach requirements.

The second major difference, at least for today, is cleanroom requirements. A semiconductor facility currently requires cleanliness in the Class 1 to Class 10 range – a maximum of 1–10 airborne particles 0.5 µm in diameter or more per cubic foot of air. FPD manufacturing requires Class 10 in some areas – photolithography, CVD, pasting, film printing, and TFT fabrication – and can tolerate Class 100 and higher in other processing areas. But there are early indications within the FPD industry that this range will collapse to the Class 1 to Class 10 level over the next few years. Table 1 provides an overall comparison of current semiconductor vs. FPD demands.

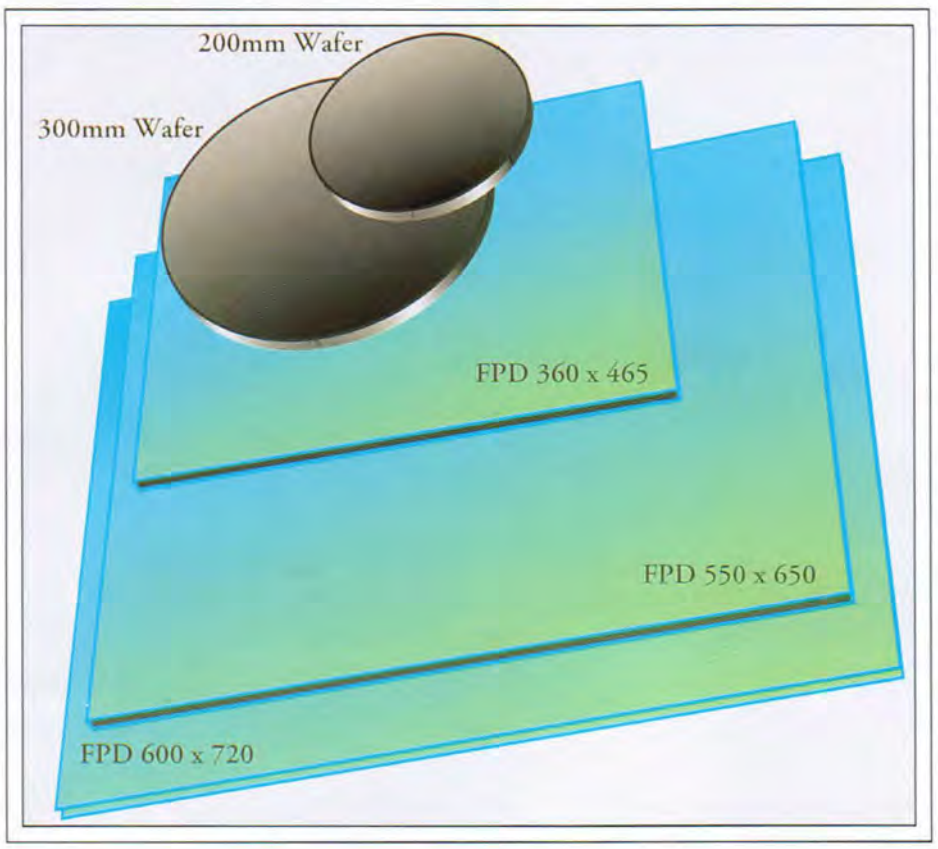

Fig. 2: The semiconductor industry's mainstream sizes of 150- and 200-mm diameters compare to the FPD industry's 350 × 450 mm. The large size, high weight, and long reach that characterize FPD processing amplify the need for automation.

The Future of FPD Automation

Current-generation semiconductor automation must be significantly enhanced before it can satisfy the requirements of FPD manufacturing. FPD robots must support heavier weights, have longer reach, and offer faster cycle times. AS/RS stockers have to be substantially redesigned to handle the higher payload and increased size of FPDs while retaining their proven reliability and software control. Class 1 and Class 10 mini-environments and substrate loaders must be developed for a wide variety of FPD substrate sizes. Attention must be given to improved cassette designs that can be standardized – as is now being

Table 1: Semiconductor *vs.* FPD Requirements.

Issue/Need	Semiconductor	FPD
Cleanliness	Class 1	Class 1 or 10
Product size	200-mm diameter – present 300-mm diameter – 3 years	360 × 465 mm – present 550 × 650 mm – near future 600 × 720 mm – 2 years
Product weight	Several ounces	>1 lb.
Cassette/pod loaded weight	<10 lbs. (4.5 kg) for 200 mm	65 lbs. (29.6 kg) for 600 × 720 mm
Sag	Not an issue now (but may be for 300-mm wafers).	<1 mm over entire surface
WIP storage (buffering)	Very safe, compact vertical storage, 25-s cycle time, Class 1, smallest possible footprint, internal transport rating of 25 lbs. (11 kg)	Very safe, compact vertical storage, <60-s cycle time, Class 1–10, smallest possible footprint, internal transport rating of 80 lbs. (36 kg)
Transport	• Intelligent monorails • Dumb conveyors • Track-mounted AGVs • Humans	• Humans • Dumb conveyors • Manual carts • Intelligent AGVs
Mini-environments	Optional technology used with SMIF interfaces to process tools.	Robotic mini-environment tool loaders required to interface with process tool.
Cluster tools	Required	Required
MCS	Required	Required
Robotic movement	Good point-to-point repeatability. Relatively small z-axis range.	Good point-to-point repeatability with highly linear movement. Large z-axis range.
Lot tracking & control	Required	Required
Transfer time	<4 s per wafer	<10 s per plate

done under a United States Display Consortium contract. Stockers must have internal robot systems that support 40–70-lb. cassettes/pods and have grippers with six times the load rating of their semiconductor equivalents.

Traditional semiconductor robotics suppliers need to offer a very different tool configuration to handle the large glass areas of FPDs. A major difference is in the robot end-effectors for FPDs. These devices must be large enough to support the glass without allowing more than 1 mm of sag, be thin enough to fit within the pitch of the cassette, and stiff enough not to deflect. Automation suppliers will have to work with FPD tool manufacturers in the design of custom end-effectors for specific needs while employing standard modules to minimize cost.

Because of the panel sizes, FPD tool loaders add a fair amount of footprint to the tool. When you add a cassette I/O module with an AGV interface to the loaders, the systems become quite large. Following the introduction of the first FPD automation systems, customers will surely push their suppliers to configure the systems to reduce equipment footprints.

Conclusion

The FPD industry is in the enviable position of being able to benefit from the best developments in well-proven semiconductor automation while avoiding the years it took to bring these developments to fruition. Existing automated storage and materials-transport systems are being applied to meet FPD-industry demands, and the next generation of high-performance tool-loading robots for FPDs are now being introduced.

The parallels between semiconductor and FPD processing suggest that this automation, combined with the evolving technology of FPD processes, will lead to significant price reductions and performance improvements in FPD manufacturing over the next decade. ■

Please send new product releases or news items to Joan Gorman, Departments Editor, Information Display, c/o Palisades Institute for Research Services, Inc., 201 Varick Street, New York, NY 10014.

Sputtering Issues for Flat-Panel Displays

Ceramic ITO sputtering targets cost more than indium-tin-alloy targets, but for large substrates they're worth the cost.

by David Danovitch and Hung Dang

FLAT-PANEL DISPLAYS (FPDs) require a variety of thin-film depositions. Table 1 lists a few widely used materials with some of their display applications. The trend towards larger displays translates into a growing need for large-area depositions, while the need for improved display performance, quality, and cost is placing more stringent demands on the characteristics and quality of the deposited films.

Because sputtering techniques can provide excellent film uniformity across large surfaces while maintaining high deposition rates, they are becoming the deposition technology of choice for most FPDs. But what should one know about this technology, particularly in regard to manufacturing metallized glass for displays?

Ceramic vs. Glass Substrates

The longstanding use of sputtering techniques for depositing thin films onto ceramic substrates provides a starting point for FPD process design. But even when identical metallizations are being sputtered, there are fundamental differences between typical ceramic and glass materials that demand variations in the sputtering process. The most important of these differences are the coefficient of thermal expansion (CTE) and the surface finish (see Table 2).

Borosilicate glass, often used in the manufacture of active-matrix liquid-crystal displays (AMLCDs), has a CTE of about 3 ppm/°C, compared to values of 6–9 for an alumina ceramic. Most metallizations have CTEs in the range of 10–30 ppm/°C, so there will be a greater CTE mismatch – and a greater interfacial stress – in the case of such a glass. This can translate into inferior adhesion of the metallization to the glass substrate. To minimize this effect, the sputter-process engineer must

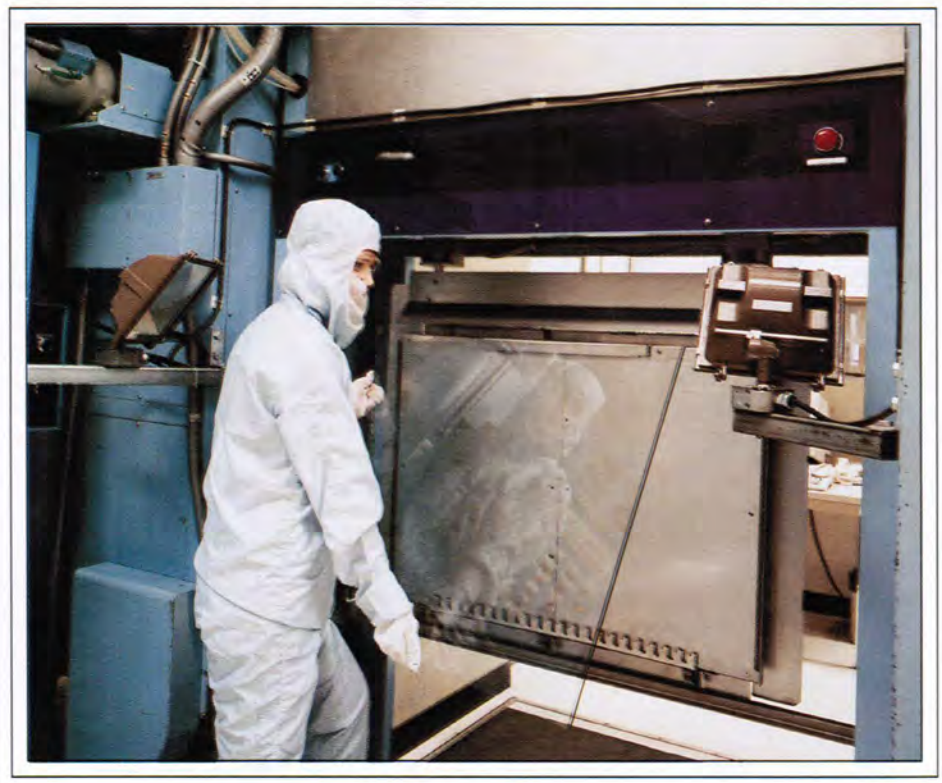

Fig. 1: A glass substrate is loaded into a dc-magnetron sputtering system at IBM's Bromont facility in Quebec. The first chamber is an in-line steam clean.

David Danovitch *is Advisory Engineer for substrate and packaging applications at IBM Canada, Ltd., 23 Blvd. de l'Aeroport, Bromont, Quebec, J0E 1L0 Canada; telephone 514/534-7073, fax 514/534-7300.*
Hung Dang *is Senior Associate Engineer for sputtering at IBM Canada, Ltd.*

0362-0972/95/1111-026$1.00 + .00 © SID 1995

Table 1: Some sputtered materials for FPD applications.

Material Type	Sputtering Mode	Display Application
Cr/Cu/Cr	Metallic	Plasma
Au	Metallic	Plasma
Al	Metallic	Plasma, EL
Cr	Metallic	Color filter (AMLCD)
ITO	Reactive or Semi-reactive	LCD, EL, FED (most displays)

pay special attention to those parameters that affect thermal stress, such as processing temperature and metallization thickness – especially of the first adhesion-promoting layer.

Glass is inherently smoother than as-fired ceramic; only with extensive polishing can the surface finish of ceramic approach that of glass. There are pros and cons related to this difference. On one hand, the smoother surface of glass absorbs less humidity, so there is no need to drive off moisture with a high sputtering temperature. On the other hand, glass does not benefit from the interlocking nature of a rough surface, which is another challenge to film adhesion. As a result, making sure the glass surface is clean prior to sputtering is critical.

Pre-Cleaning Glass Substrates

An efficient pre-cleaning process is essential not only for optimal adhesion, but also to ensure the best possible visual film quality. The properties required of a display product – in contrast to a microprocessor, for example – result in different criteria for the inspected substrate. At IBM Canada's facility in Bromont, Quebec, for instance, the in-line deionized steam-cleaning operation integrated into the sputter equipment is sufficient for ceramics, but we found that glass substrates needed an effective brush-cleaning operation to remove all organic residues. The in-line steam-cleaning can then serve as a final complementary step for dust and particle removal, while the responsibility for brush-cleaning resides with the glass supplier (Fig. 1).

Sputter Process Design

Minimizing thermal stress at the metallization–glass interface is important for optimizing adhesion. Substrate temperature and metallization thickness – two critical parameters in the interfacial thermal-stress relationship – can be controlled on a dc-magnetron sputtering system by adjusting the heater element and current settings, respectively. These adjustments are easy to make and are relatively stable, allowing quick changeovers between ceramic and glass substrates or even between glass substrates of different CTE – borosilicate vs. soda-lime glass, for example. Combined with an effective pre-cleaning strategy, appropriate settings consistently produce adhesion levels that exceed display requirements.

Table 2: Comparisons of some typical properties of ceramic and glass substrates.

Property Characteristics	Ceramic	Glass
CTE (μm/°C)	2	3.6
Surface finish	1 μm	6 Å
Metallization thickness (μm)	2–8	0.1–2
Adhesion (psi)	2200	1000
Pinhole susceptibility	Less	More
Discolorations	Tolerated	Unacc.

Sputtering ITO

Indium-tin oxide (ITO), a semiconductor material combining relatively high optical transmittance with low sheet resistance, is by far the most commonly used material for transparent conductors in display products. The successful use, and even superior quality, of dc-magnetron sputtering for ITO deposition has been documented previously.[1,2]

Depositing an oxide material such as ITO by sputtering is called a *reactive* sputtering process because oxygen is added to the argon gas of the sputtering chamber to react with the elemental indium and tin before they impinge upon the substrate surface. There are two approaches to reactive sputtering, which are largely related to the two categories of sputtering targets.[3,4]

The original approach to ITO reactive sputtering uses a metal-alloy target comprised of 90% indium (In) and 10% tin (Sn). This process is considered to be fully reactive in that the elements of the alloy target must be converted to oxide form prior to reaching the glass substrate. This is accomplished by means of the oxygen present at a fixed ratio in the argon atmosphere of the sputtering chamber.

A more recent trend is the use of a sintered ceramic target – also known as an oxide target – containing 90% In_2O_3 and 10% SnO_2. Here, there is a much lower level of oxygen in the chamber, which is used merely to maintain the oxide state of both the target material and the deposited material. Therefore, this approach is often called *semi-reactive* sputtering.

In selecting the type of target – and, consequently, the sputter mode – several issues must be weighed:

- Target costs,
- Attainability and controllability of deposited-film properties,
- Target integrity,
- Ease of changeover from/to other metallizations and substrates.

Each of these issues can be more or less important, depending upon the product line being produced in a particular manufacturing facility, the range of ITO-film properties required, and whether other products must share the same sputter system (Table 3).

Table 3: Comparison of alloy *vs.* ceramic targets for dc-magnetron sputtering of ITO.

Target Type	Alloy	Ceramic
Sputtering mode	Reactive	Semi-reactive
Total sputter pressure (Pa)	0.2–0.3	0.2–0.5
Ar/O_2 volume flow ratio	85/15	98/2
Film property range	Limited	Wide
Film-property control	Sensitive	Stable
Target integrity	Sensitive	Robust
Normalized target cost	1	1.8

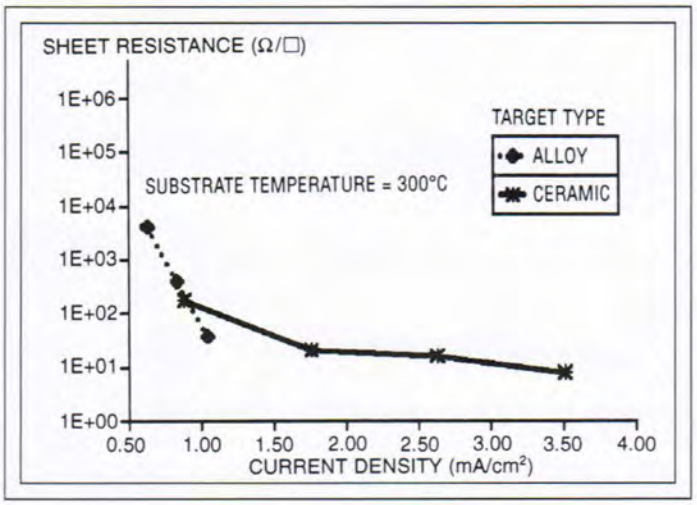

Fig. 2: Sheet resistivity obtainable with alloy vs. ceramic sputtering targets.

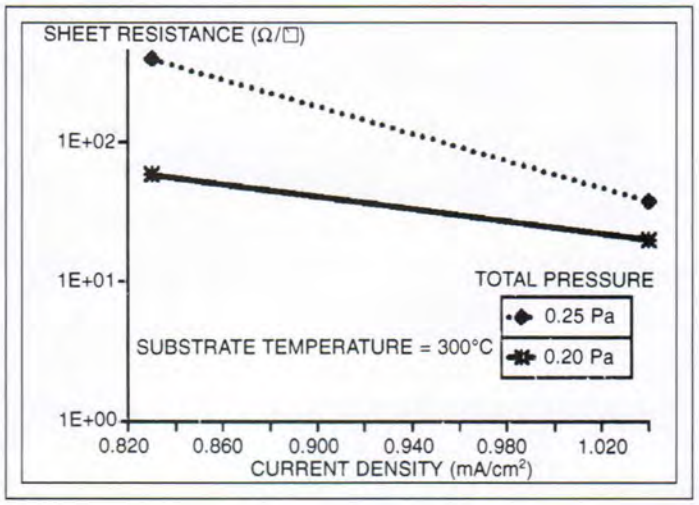

Fig. 3: Relatively small changes in the partial pressure of oxygen in the sputtering chamber can produce substantial changes in sheet resistance when using alloy targets and fully reactive sputtering.

Alloy targets are relatively simple to manufacture, and they have good composition control and high density, which are highly desirable target characteristics. There are, however, two major drawbacks to InSn alloy targets. The first is related to the melting point of the alloy, which is much lower than that of the oxide target. This limits the process engineer's flexibility in varying sputter parameters to obtain a wide range of film properties. For example, adjusting current density is an easily controllable way to adjust sheet resistance. Although the relationship between sheet resistance and current density is similar for both target types, the higher current densities are not available with alloy targets because they would threaten to melt the target and dislodge it from its mounting plate (Fig. 2).

The second drawback to alloy targets relates to the fully reactive sputtering itself. In this process, the exact partial pressure of oxygen in the sputtering atmosphere is critical to obtaining films of optimum resistivity and transmittance. The process window is narrow and more difficult to maintain, and a small shift in total pressure can change the sheet resistivity by a factor of 7 (Fig. 3).

Targets used in fully reactive sputtering also have a high susceptibility to target poisoning: some of the oxygen contained in the plasma will eventually reach the target and oxidize the surface. Because deposition rates are slower for the oxide than for the metals in the alloy, the deposition will vary as surface oxidation progresses. This makes it difficult to match the sputter parameters with the desired film properties consistently. In addition, the high oxygen level required for this mode requires additional chamber purging prior to any non-reactive depositions.

A ceramic ITO target is manufactured by sintering indium- and tin-oxide powders. The critical parameter in a high-quality oxide target is its density. High density and high consistency of that density ensure high, stable sputter rates and uniform, high-quality films.[5] Historically, the difficulty of achieving high densities on a consistent basis limited the use of oxide targets. Today, target manufacturers are able to control the porosity of the ceramic and produce targets with very stable densities that are greater than 90% of 7.15 g/cm^3 – the theoretical maximum (Fig. 4).[5]

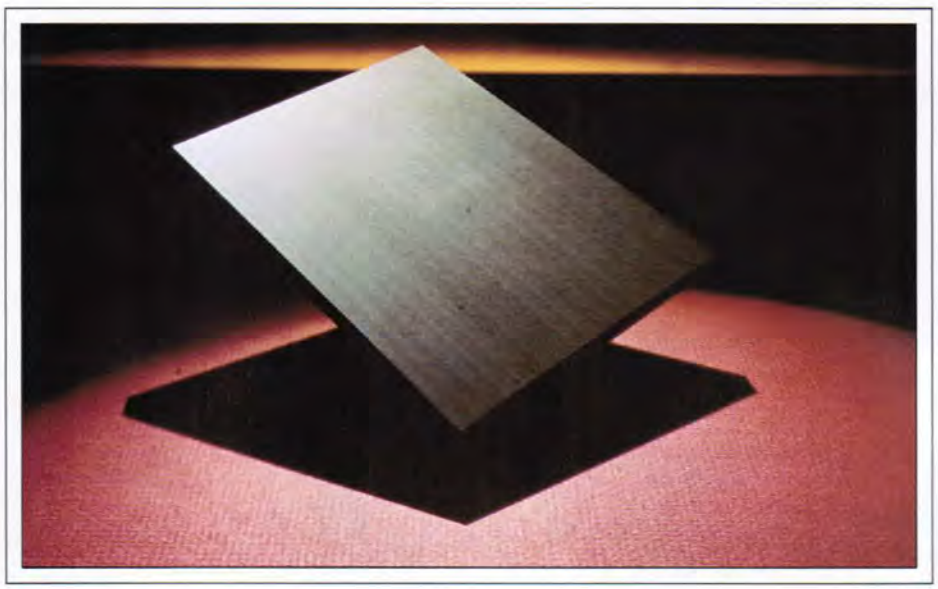

Arconium

Fig. 4: An ITO (ceramic) sputtering target. (Photo courtesy of Arconium, Providence, Rhode Island.)

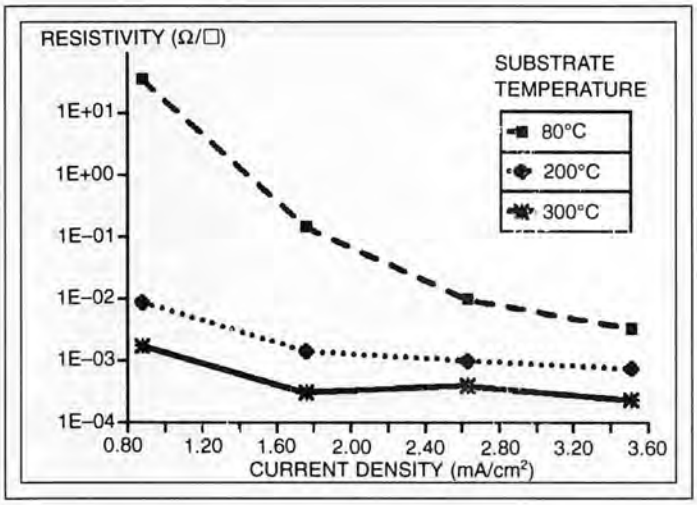

Fig. 5: A wide range of volume resistivities can be produced with ceramic sputtering targets by varying the sputter current density and substrate temperature.

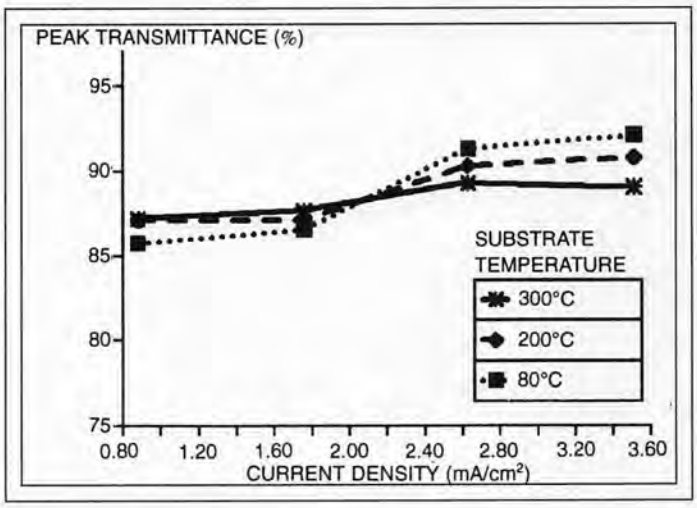

Fig. 6: Peak transmittance of the ITO film is high and relatively constant as current density to the ceramic sputtering target is varied.

Although oxide targets are more expensive than their alloy counterparts, the semi-reactive nature of the deposition process eliminates the process-control problems that are seen with alloy targets. Oxygen partial pressure is only required to avoid reduction of the oxide states, so precise control is not as critical. Since oxygen requires a significantly lower partial pressure when used in this way, target poisoning and chamber purge times are significantly reduced.

Having high melting points, oxide targets can accept high current densities without the risk of melting. This permits a wide range of film properties, with volume resistivities as low as 2.3×10^{-4} Ω-cm, sheet resistivities as low as 4 Ω/□, and transmittance as high as 92%, all obtained in manufacturing-level runs (Figs. 5 and 6).

Conclusions

The ever-increasing demand for larger sizes, higher quality, and lower cost in FPDs is consistent with large-volume dc-magnetron sputtering for panel metallization. An understanding of the specific characteristics of the substrate and the properties of the display film are the keys to designing an effective and consistent sputter manufacturing process. By selecting ceramic targets for ITO deposition and easy-to-adjust sputter parameters for substrate changeovers, dc-magnetron sputtering can offer a wide range of metallization capabilities – including those suitable for FPDs – without sacrificing cost or quality.

References

[1]M. Hansen, "Reactive Sputtering ITO for the Electronics Industry" (1986).

[2]Y. Shigesato and D. C. Paine, "A microstructural study of low resistivity tin-doped indium oxide prepared by d.c. magnetron sputtering" (1993).

[3]N. Ogawa *et al.*, "Transparent Conductive Thin Films of ZnO:Al by DC Magnetron Sputtering" (1994).

[4]L. R. Gilbert *et al.*, "Comparison of ITO Sputtering Process from Ceramic and Alloy Targets onto Room Temperature PET Substrates" (1993).

[5]B. G. Lewis *et al.*, "Structure and Performance of ITO Sputtering Targets" (1994). ■

Please send new product releases or news items to Joan Gorman, Departments Editor, Information Display, c/o Palisades Institute for Research Services, Inc., 201 Varick Street, New York, NY 10014.

FPD MANUFACTURING PROGRAM STATUS (September 1995)

During USDC's first 2 years, the Technical Council selected 23 priority programs covering various areas of process technology used in manufacturing FPDs. These include programs for establishing a U.S.-based supply of equipment, materials, or process technology, using existing technical know-how, as well as both evolutionary and revolutionary technology advancements. Ten of these programs have been brought under contract and development has begun while others are in various stages as summarized below.

Topic/Contractor	Funding ($M)	USDC ß-site	Status	Current Milestone
Color filters *Rohm & Haas, Shipley Co., Clarkson University*	1.8	Several	Development under way; 9/1/94 start	Phase II development plan; sign-off 9/15/95
Color filter fabrication			Contract negotiations	Anticipated signing 9/95
Pre-assembly test & inspection *Photon Dynamics*	2.4	Xerox	Development under way; 3/23/94 start	Delivery of the ß-site tool 10/30/95
Treated substrates *Donnely Applied Films*	2.5	Several	Development under way; 5/12/94 start	Delivery of final qualification lots to two USDC member sites 9/1/95
Polymer coating *SVG, FAS Technologies*	2.7	Planar	Development under way; 7/12/94 start	Begin prototype system testing 7/12/95
Dry etching *Lam Research, Lawrence Livermore National Labs, University of Wisconsin*	15.1	Xerox	Development under way; 6/20/94 start	Engineering prototype chamber design completed 9/26/95
Glass supply *TBA*			On hold	
Glass inspection *Display Inspection Systems*	1.4	OIS	Development under way; 6/11/94 start	Industrial machine design review 10/24/95
Automated interconnect *TBA*			Contract negotiation	Anticipated signing 9/95
Spacer application *Accudyne*	1.7	Standish	Development under way; 6/13/94 start	Delivery of the ß-site tool 10/30/95
Handling benchmarking *Competitive Strategies*	0.2	N/A	Study completed 10/1/94	Final report issued 3/95
Handling (cassette design) process *Progressive System Technologies*	0.6	Several	Development under way;	Complete type-1 carrier design & fabrication 12/28/95
Handling (tracking) process *PRI Automation, Florod*	2.5	TBD	Development under way; 3/1/95 start	Substrate handling system design review 9/20/95
Factory modeling			Evaluating proposals	Selection of awardee 11/95
Large-area lithography *Tamarack Scientific*	2.1	Photonics Imaging	Development under way; 3/1/95 start	Begin machine assembly 12/1/95
Large-area mask fabrication and blanks			RFP preparation	Issue in 1995
Direct laser imaging			RFP preparation	Issue in 1995
Wet processing			Evaluating proposals	Selection of awardee(s) 9/95
Polarizers, UV & retardation films *Polaroid*	10.9	Several	Development under way; 6/1/95 start	Complete all major equipment specifications 9/95
Literature translation & database management	0.4	N/A	On hold	
Glass cutting			Issued for bids	Proposal due data 9/15/95
Driver infrastructure			RFP preparation	Issue in 1995
ac/dc converters/inverters			Project deferred	
Plastic substrates			Evaluating proposals	Selection of awardee 11/95
Reactive ion etching *Plasma-Therm*	4.8	TBD	Development under way;	Develop etch uniformity fixturing, 11/1/95
High-resolution pattern lithography			RFP preparation	Issue in 1995
LC processing and alignment			RFP preparation	Issue in 1995

Source: USDC News, Vol, II, No. 7, September/October 1995

Edited by JOAN GORMAN

Wall-sized flat-panel display system

RGB Spectrum, Alameda, California, has introduced ComputerWall®, a multiscreen flat-panel display system that will make large-format displays more accessible to many more sites, especially to mobile command centers, where space restrictions have prevented the use of projector or large-monitor systems. The panels, introduced by Science Applications International Corp. (SAIC), are the largest full-color plasma displays currently in production and feature a full 21-in.-diagonal screen with a total depth of less than 2 in., 260,000 displayable colors, and a wide viewing angle comparable to that achieved with CRTs. Four 21-in. screens can be grouped together to create a 42-in.-diagonal wall-sized display surface. ComputerWall can split a full-color 1280 × 1024-pixel-resolution computer image across a four-screen array of projectors, monitors, or flat-panel screens, each displaying one-fourth of the total resolution. It easily connects to the RGB-monitor outputs of virtually all workstations and PCs.

Information: RGB Spectrum, 950 Marina Village Parkway, Alameda, CA 94501. 510/814-7000, fax 510/814-7026.

Circle no. 1

New CRTs for Imaging

Hitachi America, Ltd., Montvale, New Jersey, has introduced the ACCUVUE® UX color-monitor series featuring the new Hitachi UltraColor™ CRT. The 21-in. (19.9-in.-diagonal viewable area) color CRT incorporates Hitachi's UltraFine™ dot-pitch asymmetric shadow-mask design and an advanced high-frequency video amplifier. The new microprocessor-based auto-scanning monitors provide edge-to-edge sharpness resolutions up to 1600 × 1280 or 1600 × 1200 (UX4921) at 85 Hz and sharper CAD images and enhanced character legibility for document imaging.

Information: Hitachi America, Ltd., Office Automation Systems Div., 110 Summit Ave., Montvale, NJ 07645. 201/573-0774, fax 201/573-7660.

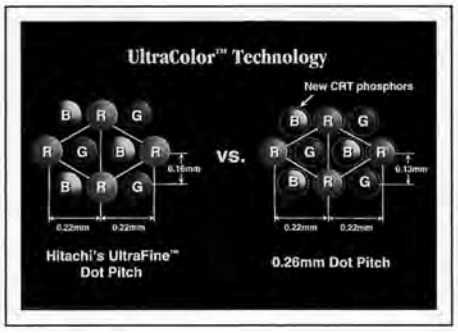

Circle no. 2

FPD robots

Equipe Technologies, Sunnyvale, California, has introduced the FPD 400 series second-generation Class 1 cleanroom-compatible LCD-handling robots which are specifically designed to process larger, next-generation FPDs. Handling payloads of up to 15 lbs., the robots have a radial reach of up to 30 in., plus end-effector length, and a vertical travel distance extending to 17 or 21 in. The FPD 400 series reduces the average throughput transfer time from 8 to 6 s, enhancing high-volume production capabilities. The patented mechanical system and flexible printed-circuit board, with life expectancies of over 10 million cycles, coupled with a high ESD tolerance of 21 kV, contribute to an MTBF of greater than 30,000 hours.

Information: James Cameron, Equipe Technologies, 733 North Pastoria Ave., Sunnyvale, CA 94086. 408/522-0350, fax 408/522-0358.

Circle no. 3

Industrial touch monitor

Nortech Engineering, Inc., East Walpole, Massachusetts, has announced the CM1510, a 15-in. industrial video monitor now available with resistive, capacitive, or surface-acoustic-wave (SAW) touch screens. The monitor is totally self-contained in a sheetmetal enclosure with the front panel sealed to NEMA-4 ratings and is available in either a rack- or panel-mount configuration. The display has a resolution of 1280 × 1024 (non-interlaced), a 0.28 dot pitch, and uses a 15-in. flat square CRT which allows image adjustment to the edge of the screen. Prices for the CM1510 touch screen start at $1825, including a serial or ISA bus touch controller; $995 without controller.

Information: Mel Silverstein, Nortech Engineering, Inc., 153 Washington Street, P.O. Box 266, East Walpole, MA 02032. 508/668-3490, fax 508/668-3568.

Circle no. 4

First outdoor kiosk

Factura Kiosks, Inc., Rochester, New York, has announced the DuraShell™, the industry's first outdoor interactive kiosk designed to withstand harsh environments and to meet UL/FCC, severe weather, and security requirements. DuraShell consists of a weatherproof enclosure, internal environment-control module, and power-distribution system, along with optional kiosk peripherals, such as touch monitor, credit-card reader, and other accessories. The kiosk is designed to

safely house any standard PC system in an outdoor environment, thus providing computer access to the general public in settings such as open-air transit stations, shopping centers, sports stadiums, or any other outdoor location. A standard off-the-shelf kiosk housing weighs 350 lbs. and includes enclosure, air-conditioning and heating system, and power distribution system. Pricing for the DuraShell™ outdoor-kiosk housing, in 100-unit quantities, is approximately $2500 per unit; larger volume discounts are available.

Information: Factura Kiosks, Inc., 882 Linden Ave., Rochester, NY 14625. 716/264-9600, fax 716/264-9575.

Circle no. 5

Compact LCD graphic display

Seiko Instruments USA, Inc., Torrance, California, has announced the G1226, the newest member of its high-contrast LCD graphic-display family that enables easy and economical upgrading from character-only to graphic display for portable/hand-held equipment, data-interface applications, pagers, phones, medical instrumentation, and data-collection terminals. With a simple change in software, the new module accommodates European- and Asian-language characters, which many 5 × 7 character-only modules do not. The G1226 features a 128 × 64 dot-matrix LCD graphic display with a wide variety of optional font types and sizes. The user can also highlight, reverse out, or view waveforms on the LCD. Built-in drivers eliminate the need for an external controller, while an 8-bit MPU interface allows for design flexibility. The module measures 93.0 (H) × 70.0 (V) × 11.4 (T) mm (reflective version), weighs 72 g (approximately 2.5 oz.), and features a contrast ratio of 4:1, a dot size of 0.48 × 0.48 mm, a dot spacing of 0.04 mm, a viewing area of 70.7 (H) × 38.8 (V) mm, and a viewing angle of 55°. Samples are available now, with production quantities ready for delivery from stock. In 100-piece quantities, the G1226 graphic display is priced in the $64–70 range; the optional backlight version is $67–72.

Information: Seiko Instruments USA, Inc., 2990 W. Lomita Blvd., Torrance, CA 90505. 310/517-7771, fax 310/517-7792.

Circle no. 6

Digital-video cassette camcorder

Matsushita Consumer Electronics Co., Secaucus, New Jersey, has announced the PV-DV1000, the first consumer digital-video cassette (DV cassette) camcorder for the U.S. market. This new video format delivers pictures with the highest horizontal resolution available to consumers today – 500 lines, nearly 20% more than a laserdisc and 50% more than a live TV broadcast – and records audio with CD quality. The signal-to-noise ratio of the PV-DV1000 is 54 dB, an improvement of 6–9 dB over conventional analog systems and 2–3 times better than existing consumer video equipment. A newly developed metal evaporated tape is used, which is available in 30- and 60-min lengths. With a width of only 6.35 mm and a cassette shell approxi-

mately one-twelfth the size of a standard VHS videocassette, the tape can store up to 11 Gbytes of information – the storage capacity of 7500 floppy disks. Since the image is digital, it can be viewed, edited, and manipulated on a personal computer or even sent through telephone lines. The clarity of the picture also makes the DV cassette suitable for use with video printers to produce high-quality hard-copy prints from home videos. The PV-DV1000 is comparable in size to a standard palmcorder and is ergonomically balanced to rest comfortably in the hand.

Information: Matsushita Consumer Electronics Co., One Panasonic Way, Secaucus, NJ 07094.

Circle no. 7

High-voltage CRT driver

M. S. Kennedy Corp., Cicero, New York, has introduced the MSK 645, a high-voltage high-speed CRT driver with an output voltage of 70 Vp-p with transition times typically less than 2.5 ns and a bandwidth of 150 MHz, making it suitable for driving high-performance monitors with resolutions up to 1280 × 1024. To minimize external component count and maximize bandwidth by eliminating stray and lead capacitance the gain is set internally. The 9-pin hermetic metal package is electronically isolated from its internal circuitry, allowing it to be directly mounted to the heat sink without insulating spacers. The case measures only 1.9 × 0.7 × 0.25 in. The MSK 645 is available in commercial and MIL-H-38534 screened versions. Evaluation units are available upon request. Pricing starts at $68 for 100-piece quantities of the commercial version.

Information: Greg Overend, M. S. Kennedy Corp., 8170 Thompson Road, Cicero, NY 13039. 315/699-9201, fax 315/699-8023, e-mail: msk02@aol.com.
Circle no. 8

Compact high-efficiency power supply

Keltron Power Systems, Inc., Waltham, Massachusetts, has introduced the SHV series of low-cost high-voltage power supplies engineered specifically for CRT and other applications requiring extreme efficiency in the lower power ranges. The SHV series provides 4–20 W at 88% efficiency, while utilizing Keltron's Cast-in-the-Can design to reduce production costs without sacrificing quality. The modules incorporate a horizontal synch pin that allows OEMs to specify the same unit for a wide range of scan frequencies. These compact power supplies measure 3.0 × 4.5 × 1.9 in. and are designed to fully comply with UL, CSA, and TUV standards.

Information: Tony Saracco, Keltron Power Systems, Inc., 225 Crescent Street, Waltham, MA 02154. 617/894-8700, fax 617/899-9602.
Circle no. 9 ■

Please send new product releases or news items to Joan Gorman, Departments Editor, Information Display, c/o Palisades Institute for Research Services, Inc., 201 Varick Street, New York, NY 10014.

continued from page 4

lawn is doing well, and the weeds along the roadside are also doing just fine. Nevertheless, it left me to ponder. If a cupful or less can cause this much trouble, what if it's more?

Experiential Learning 101-B

Yes, what if it is more? Not too long ago, I visited a small ceramics company in the northeastern part of the U.S. that had been put up for sale by its investors. It was a nicely run company and could have been built into a much larger and quite successful business. The only problem was that several years back, they had accidentally spilled 800 gallons of solvent that had leaked into the soil surrounding the back parking lot. The solvent was subsequently detected in the ground water. To try to remedy the problem, they now had a high-capacity well installed at each corner of the property. These wells continuously pumped in the ground water, which was then put through an elaborate filter system to remove the residual solvent, and then the cleaned water was pumped back into the underground aquifer. The installation and operation of this system was eating up all the profits of this small company. The legal liability was large and would continue for many years to come. Once potential buyers found out about this, the negotiations invariably came to an abrupt end. Today, the company is gone, but the wells and pumps are still there and still pumping away. And the original investors are still bearing the cost and the liability.

Experiential Learning 101-C

It was one of those typically warm and sunny days in the "South Bay." The midmorning freeway traffic was heavy but moving along at a steady 65–70 mph. Having left San Jose 10 miles behind me, I found my exit and made a right turn off the freeway. I was following **Bob Pressley's** instructions for how to find **Silicon Video**'s recently completed manufacturing facility. Accordingly, I would need to make just one more right turn and then continue down the road for a few blocks and there it would be. I decided I could relax; I would be there in plenty of time for my appointment. This part of the "South Bay" is a mix of densely packed residential housing and newly sprouted industrial complexes interspersed with a few remaining plots of farmland. One structure, in particular, caught my eye because it stuck out like the proverbial sore thumb. It was a large, cubical, windowless monolith. The surrounding parking lot was empty and weed infested. The landscaping around the building hadn't seen a caring hand for years. Large piles of soil dotted the property, along with a few pieces of earthmoving equipment. It was the epitome of an abandoned, lonely, ugly place – a *Back to the Future* scene gone bad.

Later, as we drove to lunch, I asked Bob if he knew what had happened to create this eerie scene. Well, guess what? The windowless building had been a production facility for one of the large, very-well-known Silicon Valley semiconductor firms. According to Bob, they had had underground tanks that developed leaks and contaminated the soil over such a large area that even properties hundreds of yards away were now involved. Bob had heard that it would be decades or longer before the mess would be cleaned up. What a stark contrast to the sparkling new facility that Silicon Video had recently made operational!

Experiential Learning 201 (Graduate-Level Course)

It is yet another sunny and warm early-summer day, but in a place very far from Silicon Valley. I am standing on a 14th-floor balcony which surrounds one of the several high-rise towers of Moscow State University. The trees are already a dense green, the students and professors are enjoying the warm sun as they go about their appointed activities, a pick-up basketball game is under way on the athletic field below, and in the distance one can hear the sounds of racecars tuning up and practicing for what will the next day be the first Grand-Prix-style auto race in Russia. From my 14th-floor vantage point, I can see Moscow laid out before me. There are fewer tall buildings than in a typical U.S. city and they aren't all clumped together. Above horizon level, I can see for many miles. But as I lower my gaze, there is a thick brownish haze covering the city.

While not as traffic-bound as most U.S. and European cities, there is nevertheless major rush-hour and all-other-hour traffic in Moscow. There are plenty of cars, trucks, and buses. But there is no pollution control – no catalytic converters, no electronic engine modules, and no dreaded emission-inspection stations. Until I experienced a drive in Moscow traffic, I had forgotten what cars used to smell like before the auto companies were forced to make improvements. After a half-hour in Moscow traffic, my eyes were watering, my throat was burning, and the smell was beginning to make me slightly nauseous. Some of the trucks and buses, with their exhausts pointed right at the cars next to them, spew out such dense dark clouds that temporarily the road disappeared from view. Clearly, in the former Soviet Union, pollution control was not nearly as important as survival, and although changes are occurring rapidly, this is still not one of high priority.

Early on a Saturday morning, I went for a run along the river. There were considerably fewer cars. But even then, I wasn't sure if I was doing anything beneficial for my health.

The exhaust fumes hung in the quiet morning air, long after each passing car had disappeared into the distance. A street-cleaning truck ahead of me was moving at about my running speed. I had to cross to the other side of the street to avoid the overpowering cloud of swirling dust and exhaust pollution. I promised myself that I would never again complain about emission-inspection stations, especially since the air in the U.S. is today nearly one-third cleaner than in the 1970s, even with many more cars on the road.

The Conclusion: Some Things I Have Learned

I like the book by Robert Fulghum, *All I Really Need to Know I Learned in Kindergarten*, in which he sums up, simply and concisely, much of what we need to know to be decent human beings. So, with credit to and inspiration from Mr. Fulghum, here's my start on some things I have learned about building and operating laboratories and manufacturing plants.

Play Fair – Don't try to take unfair advantage of your employees, customers, suppliers, or competitors.

Don't Hurt People – Make sure you operate your facility in a way that is safe. Never put costs or product delivery ahead of safety.

Keep Track of Your Things – If you bring something into your factory, do you know where it is or where it went? Shop-floor control and accounting are no harder than keeping track of your checkbook.

Clean up Your Own Mess – Be responsible. A quality product isn't created at final inspection.

Don't Leave Things Sitting Around – You bought it, you paid for it, now do something with it. Keep only those things and those facilities that add immediate value.

When You Make a Mistake, Admit It – If you can't deliver on time, let your customer know right away. Never put off giving bad news. It will be worse later.

Don't Flush and Don't Throw Away – There is no "away." If you have waste that can hurt you or others, putting it somewhere else does not take care of the problem.

Have Fun, Keep Yourself Healthy, and Make Money – Don't forget to enjoy your work. Be good to yourself. If you do and observe these rules, the money will most likely take care of itself.

Over time, I would like to refine and/or add to this list. But I need to hear your opinions and ideas to do that. The various means of communication by which you can make your suggestions are listed at the end of this column.

As usual, in this month's industry-news segment, there is plenty to report. Late summer

has apparently not caused any slowing of display-industry activity. We continue to show solid progress and growth.

Display-performance evaluation and display standards are becoming increasingly important as flat-panel displays proliferate. According to work done by **Edward Kelley** at **NIST**, existing measurement standards and practices may not adequately meet industry requirements for accuracy or ease of implementation. In order to better determine industry measurement needs and capabilities, NIST is proposing to create a transfer standard and conduct an interlaboratory experiment – a round robin – between a small number of display measurement facilities and NIST. A backlit target designed to exercise photometric capabilities associated with display measurements will be sent to participating facilities. The results will be analyzed and compared (anonymously, if desired) to provide input to the development of improved display standards. In addition, the experiment should provide valuable feedback to the participating laboratories regarding their measurement capabilities. **NIST** is soliciting volunteers for the initial small-scale experiment. However, if there is sufficient interest, further larger experiments may be planned. **Those interested in participating can contact Ed Kelley at NIST by phone at 301/975-3842 or by fax 301/926-3534.**

Matsushita Electric Industrial Co., Ltd (MEI), Osaka, Japan, has announced that they have developed 26- and 40-in. color plasma display panels, designed for use in televisions, under the direction of NHK (Japan Broadcasting Corporation) and in collaboration with the **DuPont Company** of the U.S. and **Texas Instruments Japan Limited**. Twenty-six-inch PDP samples for use in conventional televisions are expected to be available in the fourth quarter of 1995. Forty-inch samples, designed for use in HDTV, are scheduled to reach the market in the summer of 1996. The panels were developed through a joint international program in which NHK proposed the basic technology, MEI established the design and process technology, DuPont developed the ultra-high-precision thick-film technology, and TI developed the high-speed pulse driving LSI circuits. Matsushita will now also begin development of television monitors and wall-hanging TVs incorporating these panels, with expected availability in 1996 for the 26-in. model and 1997 for the 40-in. model. Mat-

display continuum

sushita has applied for 150 domestic and 20 overseas patents.

Lauren Palmateer has joined the **Xerox Palo Alto Research Center (PARC)** in Palo Alto, California, as a member of the technical staff in the Electronics and Imaging Laboratory, to work on liquid-crystal displays and scanners. Prior to joining Xerox, Lauren spent 12 years at IBM, the last five working at the IBM T. J. Watson Research Center on active-matrix LCD technology in support of IBM's joint-venture manufacturing facility, DTI. Lauren also chairs the SID membership committee.

While at the Vacuum Micro-Electronics Conference in Portland, Oregon, I ran into **Bernie Vancil**, a former colleague from my Tektronix days. His specialty then was adapting dispenser cathodes for CRT use. He has since built up his own company, **FDE Associates**. In addition to supplying cathodes – including a new, enhanced version of the traditional oxide cathode – his company makes phosphor screens and provides engineering, testing, and consulting to the display-tube industry.

Edward Ritz has established a consulting practice, also based in Portland, Oregon, specializing in electromagnetic fields, electron optics, and related display issues such as display quality characterization. Ed has over 25 years of experience, including projects involving CRT displays, optoelectronics, and surface acoustic wave (SAW) devices. He can be reached by phone at 503/644-1005.

nView Corporation, Newport News, Virginia, has named **Robert Hoke** president and CEO. Hoke, who has served as an nView director since 1992, will remain a director. He succeeds **James Vogeley**, the company's founder and pioneer of electronic image projection products. In relinquishing his position as president and CEO, Vogeley will continue to serve as a director and will concentrate his day-to-day activities in his capacity as nView's chief technology officer. Since 1987, Hoke has served as chairman of Kinetic Computer Solutions, a Pacific Northwest microcomputer training and development company and, since 1989, he has been president of TechnologyEdge, a marketing and management consulting firm serving high-technology companies. Earlier, he was general manager of the Graphic Peripherals Division of Tektronix, Inc. nView is a designer and manufacturer of computer and video projection products.

Clint Hoffman has joined **Panasonic Broadcast and Television Systems Company**, Secaucus, New Jersey, as product marketing manager for display products. His product marketing responsibilities will range from broadcast and industrial monitors to CRT and LCD projectors. Prior to this appointment, he was sales and marketing manager for Mitsubishi Electronics display products, and was with that company in various positions for 9 years.

BIS Strategic Decisions, Norwell, Massachusetts, has appointed **John Goetz** as director of BIS's Electronic Printer Systems Service and **Norman McLeod** to senior industry analyst in BIS's Hard Copy Supplies Service. They will both report to **Richard Norton**, vice president of the Imaging Technologies Group, which provides critical information and analysis on developing imaging technologies, industries, distribution channels, and markets.

NoRad Corporation, Los Angeles, California, a computer-monitor accessories manufacturer and marketer, has named **Michelle C. Hartzell** as president, CEO, and a member of the Board of Directors. Ms. Hartzell, a member of senior management for the last 6 years, replaces **Michael Hiles**, a member of NoRad's founding group. Hiles, who was instrumental in NoRad's development of EMF mitigation services, has chosen to resign in order to pursue that business development opportunity independently. NoRad will now focus on the development and manufacture of a full range of magnetic- and electric-field shielding products for monitors, as well as gaussmeters.

Patrick Glennon has been appointed vice president and general manager of **SAES Getters U.S.A.**, Colorado Springs, Colorado. In this position, he will be responsible for all of the company's operations. He was formerly SAES Getters' marketing manager and has been with the company for 13 years. He replaces **David Green**, who will now be responsible for special projects.

To keep the information network functioning and up to date, and to share your thoughts (as more of you are beginning to do), you can reach me by e-mail at asilzars@sarnoff.com, by telephone at 609/734-2949, by fax at 609/734-2127, or by "bill-and-ad-delivery" technology (the mail) c/o Jay Morreale at Palisades Institute for Research Services, Inc., 201 Varick Street, Suite 1006, New York, NY 10014. ■

sustaining members

Acer Peripherals
Ad-Vance Magnetics, Inc.
AEG Corp.
AlliedSignal, Inc./
MicroOptic Devices
Arconium Specialty Alloys
Babcock Display Products
Brewer Science, Inc.
Canon, Inc.
Capetronic USA (HK), Inc.
Celco
Cherry Electrical Products
Chunghwa Picture Tubes, Ltd.
Clinton Electronics Corp.
Compaq Computer Corp.
Corning Inc.
Corning Japan K.K.
Dale Electronics, Inc.
David Sarnoff Research Center
Diagnostic/Retrieval Systems, Inc.
Display Inspection Systems
Display Laboratories
DISCOM/Display Components, Inc.
Electronic Designs, Inc.
Electro-Plasma, Inc.
Endicott Research Group, Inc.
Epson America
F-P Electronics
Futaba Corp.
Gamma Scientific
Graseby Optronics
Grimes Aerospace Company
Hewlett-Packard Co.
Hitachi, Ltd.
F. Hoffmann-La Roche
Honeywell, Inc.
Hoya Corporation USA
IBM Corp.
ILC Technology, Inc.
Imaging & Sensing Technology
Incom, Inc.
Industrial Electronic Engineers, Inc.
Industrial Technology Research
Institute
Infinite Graphics
In Focus Systems, Inc.
Infodex, Inc.
Innotec Group, Inc.
Interface Products, Inc.
Interserv Corp.
Interstate Electronics Corp.
ISE Electronics Corp.
Kent Display Systems
Libbey-Owens-Ford Co.
Litton Systems Canada Ltd.
Litton Systems Canada Ltd. (2)
Loral Librascope
Micron Display Technology
Microphase Laboratories
Microvision Corp.
Minolta Corp.
Motif, Inc.
MRS Technology, Inc.
MTL Systems
Nippon Seiki Co., Ltd.
Norden Systems Westinghouse
nView Corporation
OIS Optical Imaging Systems, Inc.
OKI Electric Industry Co., Ltd.
Optical Coating Lab., Inc.
Optrex America
Photon Dynamics
Photonics Systems, Inc.
PixTech
Planar Systems, Inc.
Plasmaterials, Inc.
Polytronix
Progressive Systems Technology
Q.C. Optics, Inc.
Quantum Data Inc.
Rank Brimar, Ltd.
Raytheon Co.
Regisbrook Group, Ltd.
Schott Corp.
Semiconductor Systems, Inc.
Sharp Corporation – Japan
Sony Corp. of America
Sony Corp./Corporate Research
Labs
Standish Industries, Inc.
Stanford Resources, Inc.
Steag MicroTech, Inc.
Supertex, Inc.
Syntronic Instruments, Inc.
Tamarack Scientific Co., Inc.
TEAM Systems
Techneglas, Inc.
Teledyne Electronic Technologies
Terapixel, Inc.
Thomas Electronics, Inc.
Thomson Components and Tubes
Corp.
Toshiba America, Inc.
ULVAC Technologies, Inc.
Viratec Thin Films Inc.
Wande, Inc.
WinTron

index to advertisers

Business and Editorial Offices
Palisades Institute for Research
Services, Inc.
201 Varick Street
New York, NY 10014
Jay Morreale, Advertising Manager
212/620-3371 Fax: 212/620-3379

Sales Office
Palisades Institute for Research
Services, Inc.
201 Varick Street
New York, NY 10014
Erika Targum, Director of Sales
212/620-3375 Fax: 212/620-3379

Light-Years Ahead.

The ultimate in photometric measurement versatility.

For brightness, color, and CRT frequency, the PR-880, our next generation, fully-automatic filter photometer is the brightest star in the sky.

Equipped with patented Pritchard optics, for benchmark through-the-lens viewing accuracy, its built-in automatic attenuators, colorimetry filters, and apertures provide illuminating value, speed, and precision.

Fully automatic, the PR-880 masters space and time with... Auto Measurement and Calculation. One-key, programmable calibration. Full on-board CPU control. And a brilliantly backlit supertwist LCD display.

And, its advanced Auto data logging, RS-232 Remote operation, and universe of accessories, deliver stellar application performance in:

- AMLCD Display Measurement
- Aircraft Panel Luminance & Color
- Color Temperature Determination
- Automotive Lighting
- Electroluminescent Panel Evaluation
- CRT Luminance & Contrast

Fittingly, the PR-880 weighs less, costs less, and takes less to operate than any photometer in its class. And, its rugged, single-component design does more of the work, while you do less.

Leap ahead... to ultimate versatility in brightness and color measurement.

The PR-880... "Ahead– Automatically."

PHOTO RESEARCH
DIVISION OF KOLLMORGEN INSTRUMENTS CORPORATION

9330 DeSoto Avenue, Chatsworth, CA 91311-4926 USA
(818) 341-5151 FAX: (818) 341-7070

Circle no. 55 (Please send literature)

Circle no. 56 (Please have salesman call)

North America Sales Representatives: **CALIFORNIA** SCIENTIFIC SPECTRUM (Northern) Ph: (408) 997-8410 (Southern) Ph: (714) 770-1251 **COLORADO** SOUTHWESTERN ENGINEERING Ph: (303) 581-9526 **FLORIDA** ELECTRO-OPTICS, INC. Ph: (407) 645-1000 **ILLINOIS** BROOKS ENGINEERING Ph: (312) 271-2452 **NEW JERSEY** ANALECTRO, INC. Ph: (800) 247-3581 ENMARK ASSOCIATES, INC. Ph: (908) 752-3660 **NEW MEXICO** SOUTHWESTERN ENGINEERING Ph: (505) 881-3677 **OHIO** MECOM, INC. Ph: (419) 457-3231 **TEXAS** SOUTHWESTERN ENGINEERING Ph: (214) 340-1741 **VERMONT** DLG ASSOCIATES Ph: (508) 877-7880 **WASHINGTON** NORTHWEST TECHNICAL Ph: (206) 523-7228

International Sales Representatives: **AUSTRALIA** HADLAND PHOTONICS Ph: (61) (3) 560-2366 **BELGIUM** ANALIS SA Ph: (81) 225085 **FINLAND - HELSINKI** DEX OY INFRA Ph: (358) 200 600 700 **FRANCE** INSTRUMAT S.A. Ph: (1) 69-28-27-34 **GERMANY** OPTEEMA ENGINEERING GmbH Ph: (212) 67352 **HOLLAND** LANDRE-INTECHMIJ B.V. Ph: (20) 56-96-611 **HONG KONG** LIBERO Ph: (85) 2 518-0603 **ISRAEL** ANKOR Ph: (3) 575-4242 **ITALY** PHOTO SYSTEMS SAS Ph: (2) 9537-9353 **JAPAN** KYOKKO TRADING COMPANY Ph: (3) 3586-5251 **KOREA** DONGHWA INCORPORATED Ph: (2) 521-0301-5 SEPOONG IND. CO., LTD. Ph: (2) 587 5292 **SINGAPORE** SEIDENSHA CONTROLS Ph: (65) 760-0896 **U.K.** MICRON TECHNIQUES LTD. Ph: (44) 81-343-4836 **TAIWAN** TITAN ELECTRO-OPTICS CO. Ph: (886) 2-788-9500 **TURKEY** ATOTEST Ph: (312) 229-9804